NEW
SMALLER SBD15-60 SIZE
NOW AVAILABLE

HepcoMotion®

SBD
Sealed Belt
Drive

Introduction

The **Hepco**Motion SBD is an exceptionally rugged, quiet and precise linear unit. It uses super-smooth Hepco LBG caged linear ball guides having such high load capacity that system life is rarely an issue. Drive is provided by a new high strength tooth belt. The unit is housed in an anodised aluminium beam and is completely enclosed with a stainless steel cover to provide excellent protection from dirt and debris. A corrosion resistant version with all external components made in stainless steel or anodised aluminium is an option. A version for use in high specification cleanrooms is also available 📖 5-6.

Stainless Steel Cover
- Helps protect internal mechanism from ingress of debris
- Effective in any orientation
- Enhances safety and appearance

Removable Carriage Plate
- Easily detachable for customising
- Can be rotated 180° to change handing of switch cam

Mounting Platform
- Tapped holes for ease of component attachment
- Direct fixing of mutli-axis mounting brackets

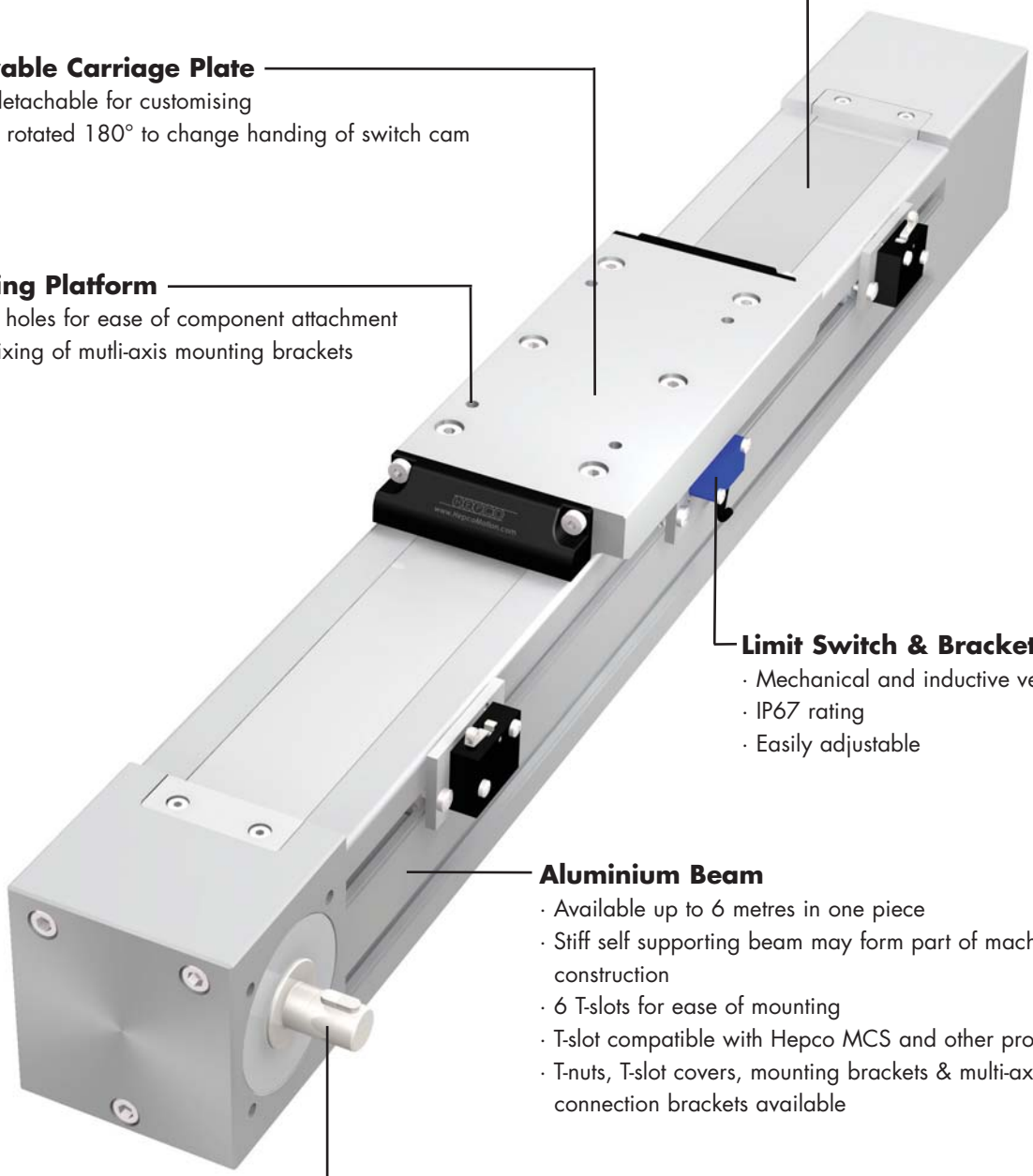

Limit Switch & Bracket
- Mechanical and inductive versions
- IP67 rating
- Easily adjustable

Aluminium Beam
- Available up to 6 metres in one piece
- Stiff self supporting beam may form part of machine construction
- 6 T-slots for ease of mounting
- T-slot compatible with Hepco MCS and other profiles
- T-nuts, T-slot covers, mounting brackets & multi-axis connection brackets available

Drive Shaft
- Supplied with fitted key
- Right, left, double & hollow shaft options (right hand shown)
- Motor connection kits available

System Composition

SBD units are available in lengths up to 6m in one piece and unlimited lengths can be achieved with joined beams. Units are factory adjusted and lubricated. Re-lubrication of the linear ball guide is easily achieved via an access hole in the beam. SBD units are suitable for single or multi-axis applications and can be supplied with a wide range of gearboxes, motors and drives. The beam profiles and T-slots are compatible with Hepco's MCS frame building system and its extensive range of accessories, allowing complete machines to be built.

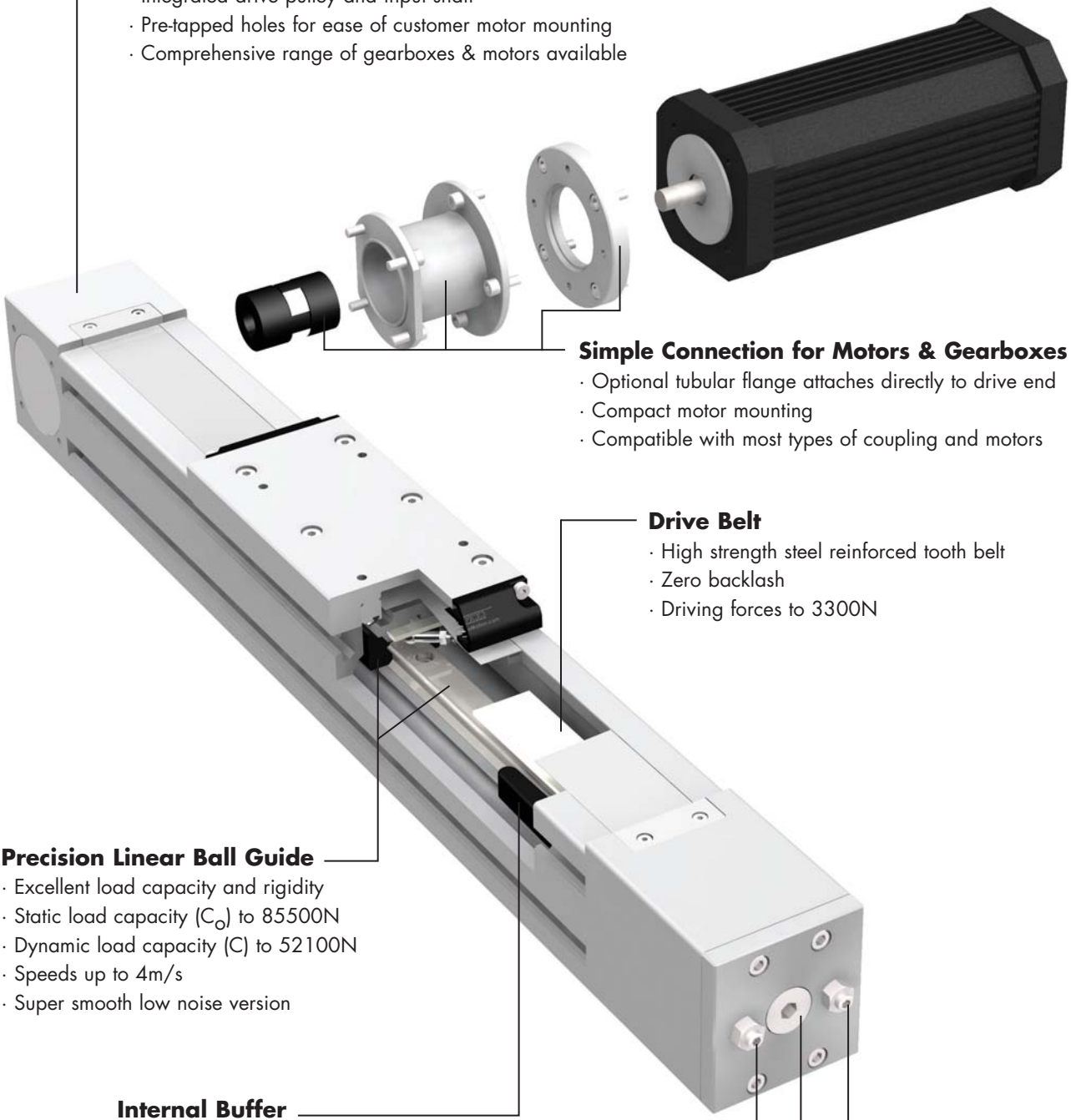

Drive End
- Compact modular design
- Integrated drive pulley and input shaft
- Pre-tapped holes for ease of customer motor mounting
- Comprehensive range of gearboxes & motors available

Simple Connection for Motors & Gearboxes
- Optional tubular flange attaches directly to drive end
- Compact motor mounting
- Compatible with most types of coupling and motors

Drive Belt
- High strength steel reinforced tooth belt
- Zero backlash
- Driving forces to 3300N

Precision Linear Ball Guide
- Excellent load capacity and rigidity
- Static load capacity (C_o) to 85500N
- Dynamic load capacity (C) to 52100N
- Speeds up to 4m/s
- Super smooth low noise version

Internal Buffer
- End of stroke protection at both ends

Simple Belt Adjustment
- Quick & easy to adjust
- Externally accessible

Data & Dimensions

The main dimensions of the SBD unit are shown below. Further details can be obtained from the 3D CAD files available from Hepco's technical department or at **www.HepcoMotion.com**. Units are supplied in increments of 60mm (SBD20-80) and 80mm (SBD30-100) up to 6000mm in one piece 📖10. Longer units are made from more than one piece. The nominal stroke length is calculated with the carriage against the internal buffers. In practice a clearance should be provided to allow for overrun.

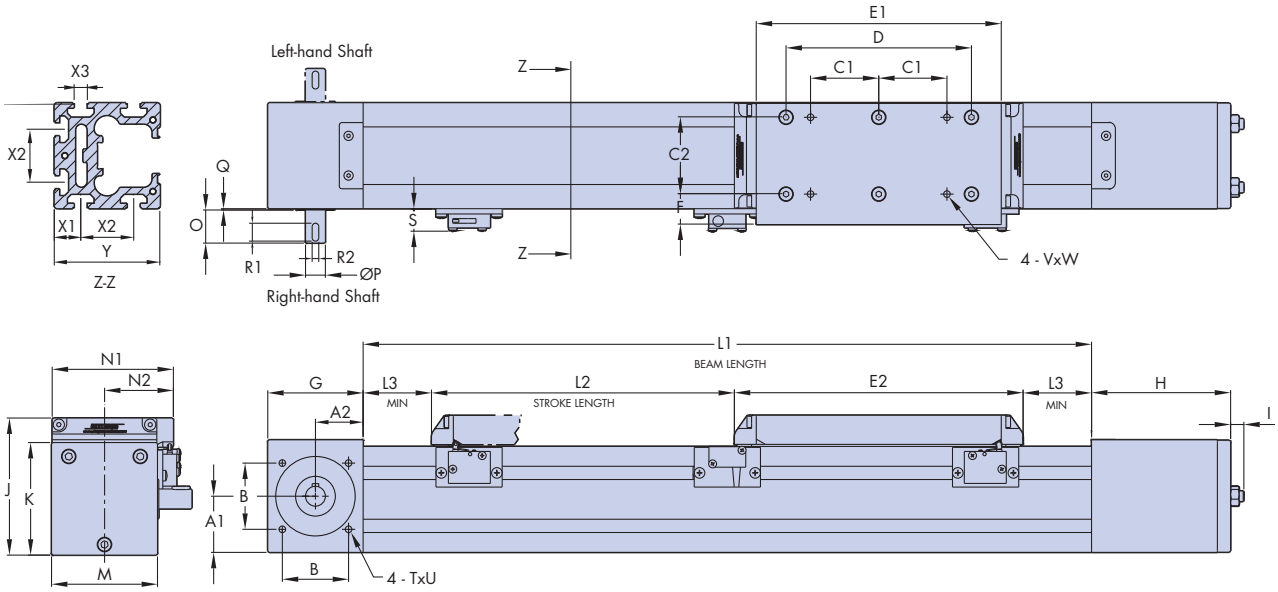

SBD Unit	A1	A2	B	C1	C2	D	E1	E2	F	G	H	I	J	K	L1 (min)	L2 Nominal Stroke	L3 (min)
SBD20-80	42.4	36	50	51.5	58	140	185	218	23	72	105	12	103.5	85	550	L1 - 300	41
SBD30-100	51.6	48	65	65	76	180	235	268	24.5	96	145.5	13	123.5	105	580	L1 - 365	48.5

SBD Unit	M	N1	N2	O	P	Q	R1	R2	S	TxU	VxW	X1	X2	X3	Y
SBD20-80	80	91.5	52	25	15	1	13.5	5	17	M6 x 15	M6 x 9.5	20	40	10	80
SBD30-100	100	112	62.5	36	20	1	22	6	17	M6 x 15	M8 x 9.5	30	40	10	100

All dimensions in mm

Re-lubrication of the ball guide carriage block is via an access point in the side of the beam (see below), which is closed off with a threaded plug. The lubrication interval depends on length of stroke, speed and duty. Contact Hepco's technical department for further details.

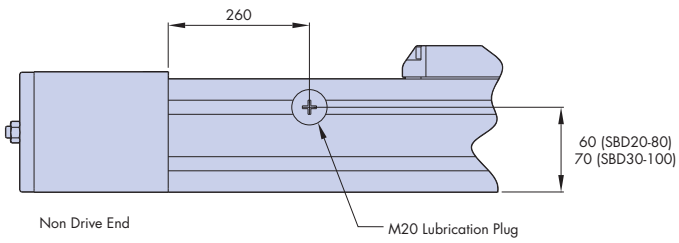

Drive Connections

The **Hepco**Motion SBD can be supplied with a fitted motor or gearbox to suit many different applications. Connection to other motors and gearboxes is quick and simple using one of the fixing kits. Standard kits to suit a range of servo motor frame sizes 036, 056 & 071 are stock items. Hepco can offer a fast service on special connection kits for attachment of customer's motors and gearboxes. Hepco can supply AC motors, stepper and servo systems including braked motors, encoders and inverter drives for power and control. Please contact Hepco for full details and application advice. A typical servo motor arrangement is shown in the illustration below.

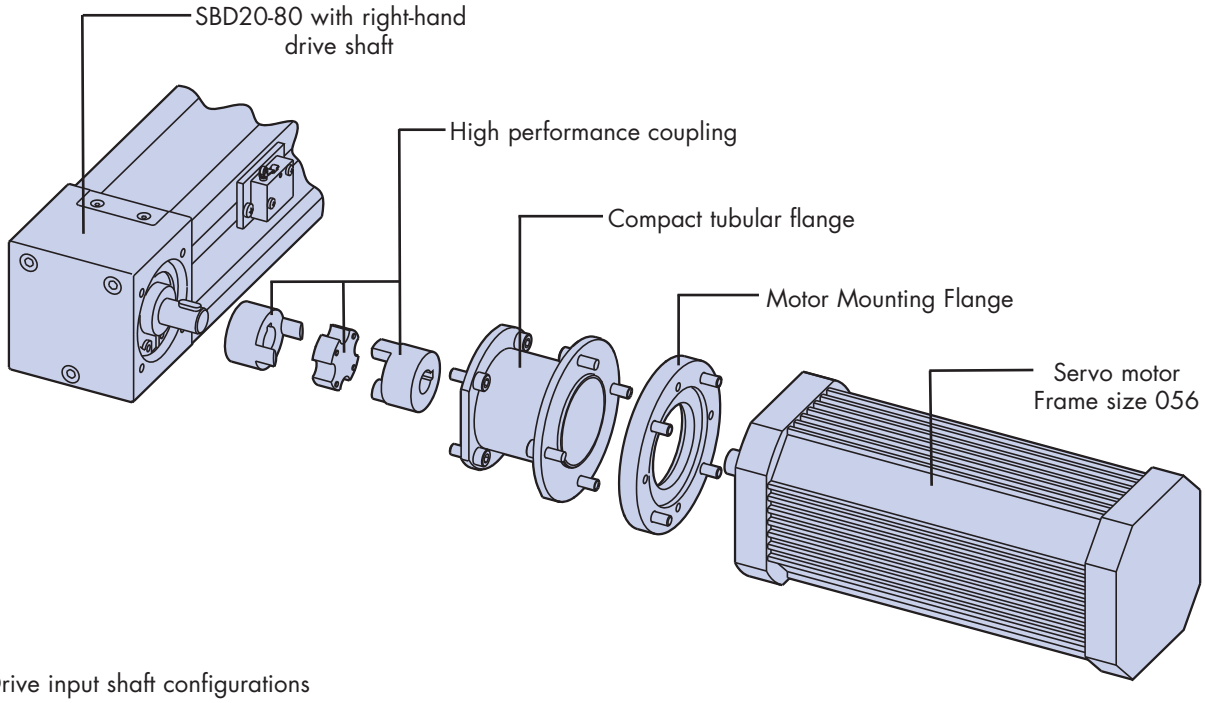

Drive input shaft configurations

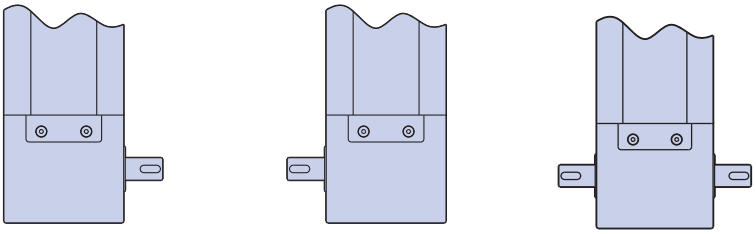

Right-hand shaft (RS) Left-hand shaft (LS) Double shaft (DS)

The hollow shafted arrangement may offer a more compact and lower cost means of retro-fitting a motor and/or gearbox onto an SBD. For further details of motor connections please visit **www.HepcoMotion.com/sbddatauk** and select datasheet No. 1 SBD motor connections.

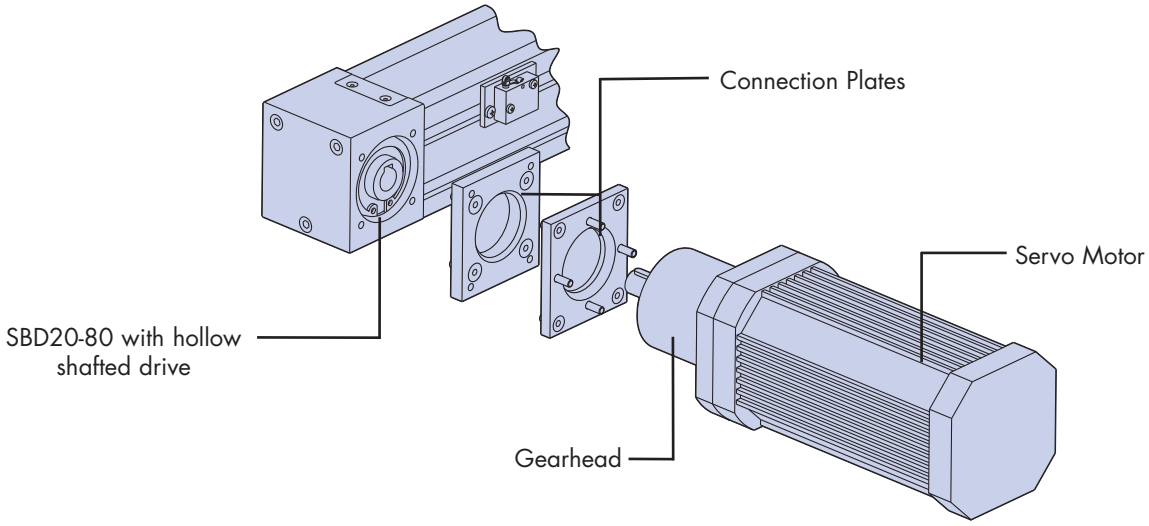

Cleanroom Version

The cleanroom version of the SBD unit has been designed to meet an increasing demand for clean manufacturing processes and environments. This version of the SBD unit is ready for connection to vacuum extraction which minimises particle emissions. All external parts are made from anodised aluminium or stainless steel. This SBD cleanroom unit is certified by the Fraunhofer IPA Institute for use in cleanroom environments and meets air cleanliness class 3 according to ISO 14644-1. For further details please visit **www.HepcoMotion.com/sbddatauk** and select datasheet No. 5 cleanroom qualification.

Fraunhofer IPA TESTED® DEVICE
HepcoMotion
SBD30-100 linear drive unit
Report No. HE 0607-357

Drive Shaft
- Stainless steel shaft with fitted key
- Right, left, double and hollow shaft options
- Motor connection kits available

Stainless Steel Cover
- Effective in any orientation
- Enhances safety and appearance

Removable Carriage Plate
- Easily detachable for customising
- Can be rotated 180° to change handing of switch cam

Mounting Platform
- Tapped holes for ease of component attachment
- Direct fixing of mutli-axis mounting brackets

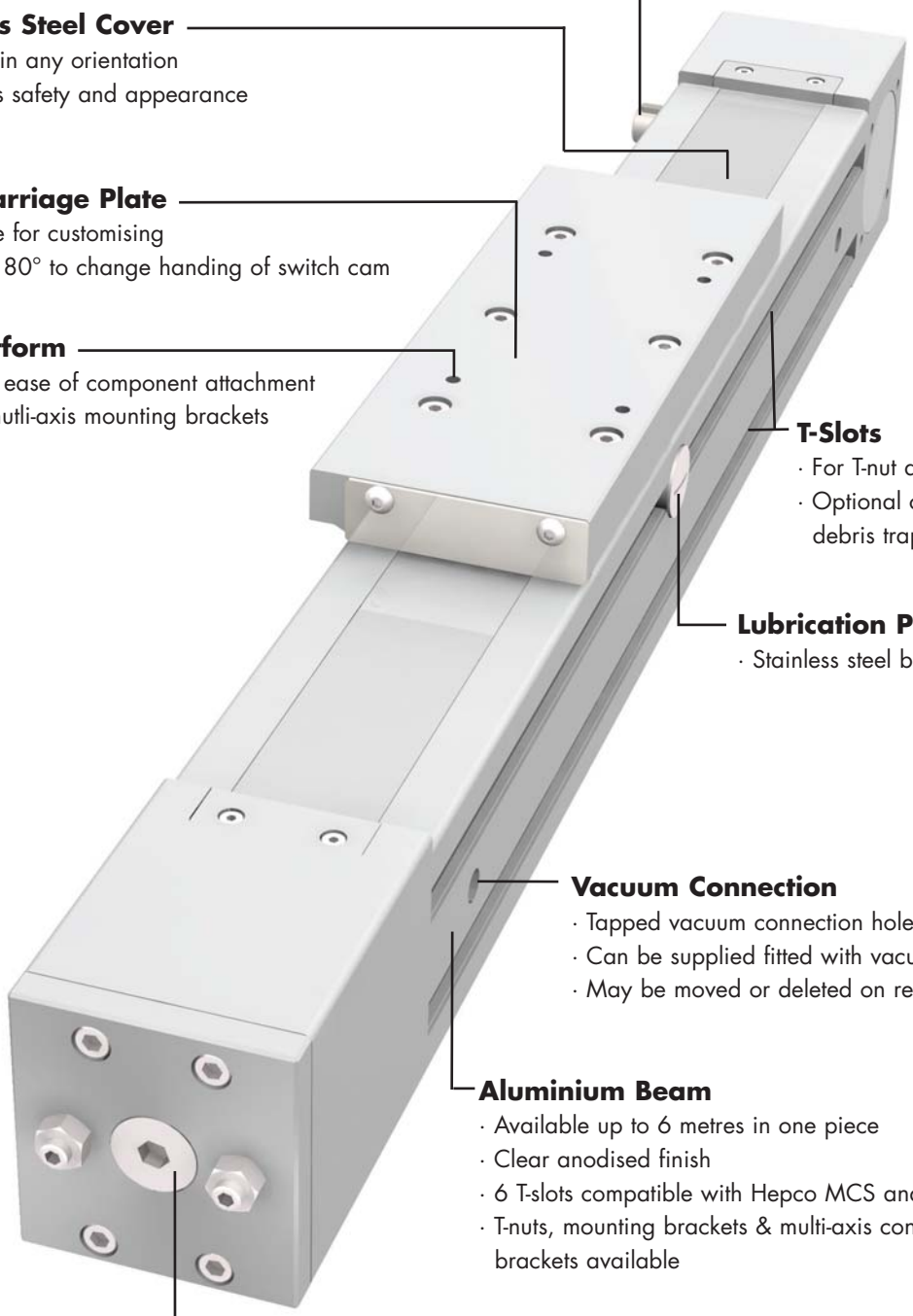

T-Slots
- For T-nut attachment
- Optional covers prevent debris traps

Lubrication Point
- Stainless steel blanking plug

Vacuum Connection
- Tapped vacuum connection holes
- Can be supplied fitted with vacuum connectors
- May be moved or deleted on request

Aluminium Beam
- Available up to 6 metres in one piece
- Clear anodised finish
- 6 T-slots compatible with Hepco MCS and other profiles
- T-nuts, mounting brackets & multi-axis connection brackets available

Stainless Steel Fasteners
- All external fasteners are stainless steel

Data & Dimensions

The main dimensions of the SBD cleanroom version are shown in the table below. Further details can be obtained from the 3D CAD files available from Hepco's technical department or at **www.HepcoMotion.com**. Units are supplied in increments of 60mm (SBD20-80) and 80mm (SBD30-100) up to 6000mm in one piece 📖10. Longer units are made from more than one piece. The nominal stroke length is calculated with the carriage against the internal buffers. In practice a clearance should be provided to allow for overrun.

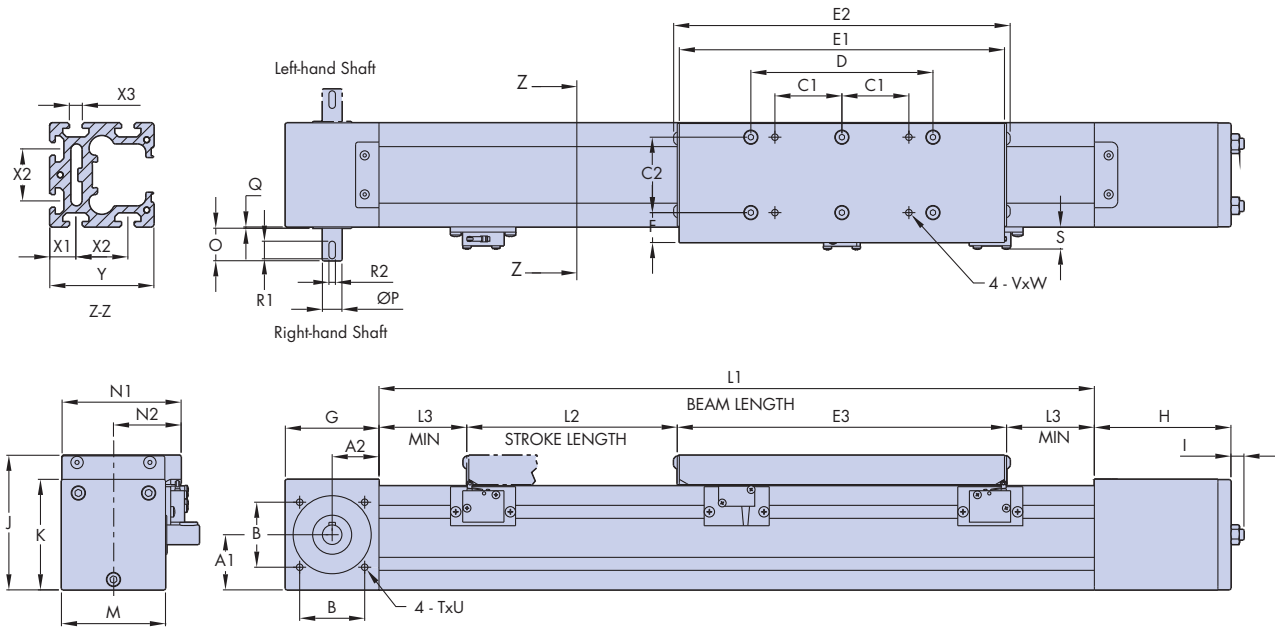

SBD Unit	A1	A2	B	C1	C2	D	E1	E2	E3	F	G	H	I	J	K	L1 (min)	L2 Nominal Stroke	L3 (min)
SBD20-80	42.4	36	50	51.5	58	140	250	259	253	23	72	105	12	103.5	85	550	L1 - 300	23.5
SBD30-100	51.6	48	65	65	76	180	300	309	303	24.5	96	145.5	13	123.5	105	580	L1 - 365	31

SBD Unit	M	N1	N2	O	P	Q	R1	R2	S	TxU	VxW	X1	X2	X3	Y
SBD20-80	80	91.5	52	25	15	1	13.5	5	17	M6 x 15	M6 x 9.5	20	40	10	80
SBD30-100	100	112	62.5	36	20	1	22	6	17	M6 x 15	M8 x 9.5	30	40	10	100

All dimensions in mm

The vacuum extraction connection hole positions together with the lubrication access plug are shown below. Hepco can supply vacuum connections pre-fitted on request. Vacuum holes can be repositioned to suit customer requirements or deleted.

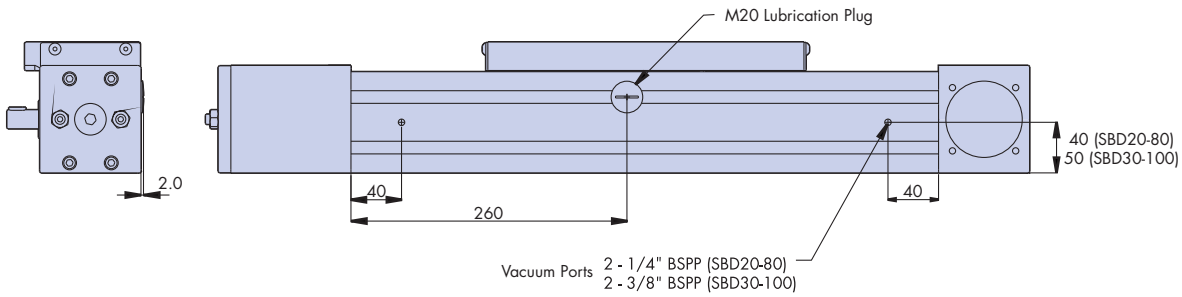

Axis Connections

The **Hepco**Motion SBD design allows for easy construction of multi-axis systems onto Hepco MCS and other frames and machine elements. A comprehensive range of mounting kits and accessories is available. Some typical system configurations are shown below to illustrate the versatility of the SBD design. Connection components have been identified together with their part numbers for ease of selection. Hepco's technical department can assist with application enquiries or undertake the design of multi-axis systems.

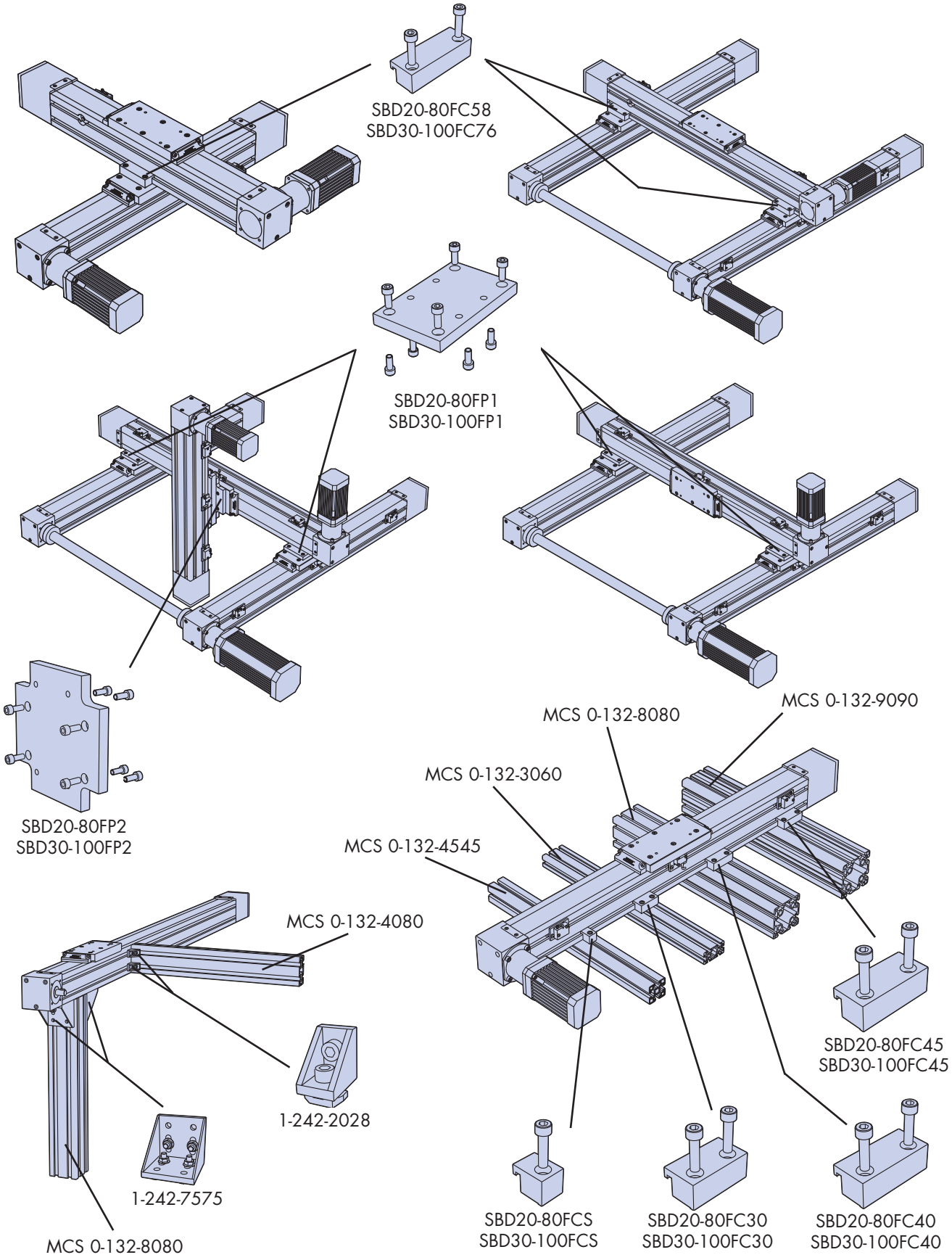

Load & Life Calculations

The nominal load capacities for the SBD (based on LBG ball guide dynamic load capacity) and a typical load corresponding to 10 000km* travel are included in the table below for each of the 5 direct and moment loading directions.

SBD Unit	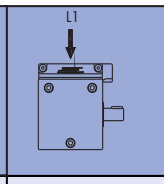	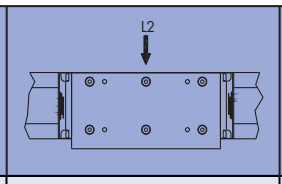	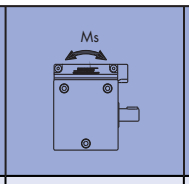	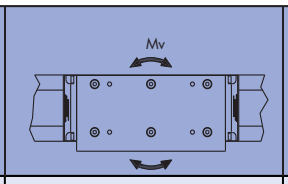	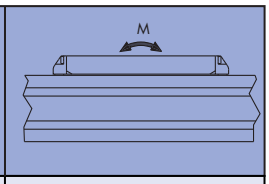
SBD20-80	21200N nominal 1813N @ 10 000km	21200N nominal 1813N @ 10 000km	189Nm nominal 16.2Nm @ 10 000km	175Nm nominal 14.9Nm @ 10 000km	175Nm nominal 14.9Nm @ 10 000km
SBD30-100	52100N nominal 4455N @ 10 000km	52100N nominal 4455N @ 10 000km	639Nm nominal 54Nm @ 10 000km	755Nm nominal 64Nm @ 10 000km	755Nm nominal 64Nm @ 10 000km

* The tabulated load figures above for 10 000km assume a value for variable load factor f_v = 2 which is suitable for most applications.

To calculate the life of an SBD unit, first calculate the load factor L_F using the equation below:

$$L_F = \frac{L_1}{L_{1(max)}} + \frac{L_2}{L_{2(max)}} + \frac{M_S}{M_{S(max)}} + \frac{M}{M_{(max)}} + \frac{M_V}{M_{V(max)}} \leq 0.2$$

The life of the system is then calculated using the equation below:

$$\text{System Life (km)} = 50 \times \left(\frac{1}{L_F \times f_v}\right)^3$$

Note: f_v is the variable load factor which takes account of speed and vibration/impact conditions. A value of 2 is appropriate for typical SBD applications, but consult Hepco for specific advice. For further guidance on load life calculations please visit **www.HepcoMotion.com/sbddatauk** and select datasheet No. 2 SBD load life calculations.

Technical Data

The table below includes the parameters necessary to calculate the performance and duty of an SBD system.

Parameter			SBD20-80		SBD30-100	
			Standard	Cleanroom	Standard	Cleanroom
Mass of carriage	Mc	kg	1.4	1.6	3.6	3.9
Mass of belt per m	Mb	kg/m	0.12		0.34	
Mass of SBD unit	Mu	kg	9.7 x L + 6.0	9.7 x L + 6.2	15.7 x L + 12.2	15.7 x L +12.5
Pulley radius	r	cm	2.39		3.5	
Drive efficiency			0.9		0.9	
Break away friction	Fba	N	25	10	35	25
Coefficient of friction	μ		0.01		0.01	
Beam moment of inertia*	I_{x-x}	mm^4	1500000		3700000	
	I_{y-y}		1800000		4600000	
Max linear force (belt)	Fmax	N	1000		3300	
Linear movement per shaft rev		mm	150		220	
Belt tooth pitch		mm	5		10	
LBG carriage basic load rating (dynamic)	C	N	21200		52100	

* The beam moment of inertia figure is used in the calculation of beam deflection, with a high figure corresponding to a stiff beam. For further guidance on beam deflection calculations please visit **www.HepcoMotion.com/sbddatauk** and select datasheet No. 3 SBD beam deflection calculations.

Ancillary Components

Limit switch assembly includes mechanical switch, bracket, fixing screws and T-nuts.

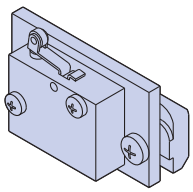

SBD20-80-V3SWA-M
SBD30-100-V3SWA-M

Limit switch assembly includes inductive switch, bracket, fixing screws and T-nuts.

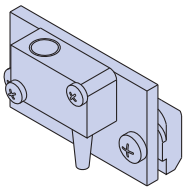

SBD20-80-V3SWA-I
SBD30-100-V3SWA-I

Plastic T-slot cover supplied fitted in each of the T-slots in the beam.

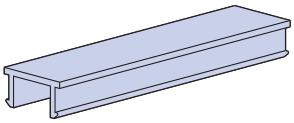

1-242-1016

The quick fit type T-nut can be inserted into T-slot and rotated through 90° to engage. T-nuts are available threaded M4, M5, M6 and M8.

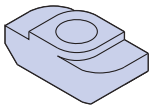

M4 = 1-242-1029
M5 = 1-242-1030
M6 = 1-242-1001
M8 = 1-242-1002

Drive shafts in a number of sizes and designs are available. Contact Hepco for details.

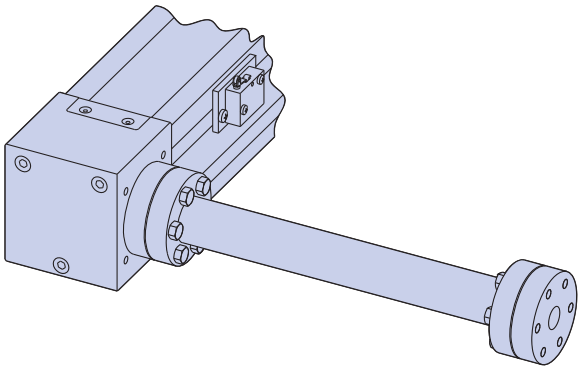

Ordering Details

The ordering information below is given to assist communication, but you are recommended to discuss your application with Hepco first so that we can help to specify the best unit configuration to suit your needs. A step-by-step SBD enquiry form is available please visit **www.HepcoMotion.com/sbddatauk** and select datasheet No. 4 SBD enquiry form.

Main Unit

SBD 20-80 L1750 C2 RS

SBD = product range

Size of unit : Choose **20-80** or **30-100**

Beam Length. Beam lengths are available in increments of 60mm from 550mm for SBD20-80 and increments of 80mm from 580mm for SBD30-100, 🕮3 & 6

Unit Type: **C1** = corrosion resistant 🕮1; **C2** = cleanroom 🕮5; leave **blank** for standard units 🕮1

Drive shaft: **LS** for left-hand; **RS** for right-hand; **DS** for double shaft 🕮4

Notes

SBD Long Carriage Option

SBD units in both standard and cleanroom versions are available with a long carriage option. This version has two LBG bearing blocks in the carriage and has much improved load capacity, particularly in M & Mv directions. The main dimensions of the standard long carriage SBD units are shown below. Further details can be obtained from the 3D CAD files available from Hepco's technical department or at **www.HepcoMotion.com**. Standard & cleanroom units are supplied in increments of 60mm (SBD20-80) and 80mm (SBD30-100) up to 6000mm. Longer units are made from more than one piece. The nominal stroke length is calculated with the carriage against the internal buffers. In practice a clearance should be provided to allow for overrun. Re-lubrication of the ball guide carriage blocks is via two access points in the side of the beam (see below), and closed off with a threaded plug. The lubrication interval depends on length of stroke, speed and duty, contact Hepco's technical department for further details.

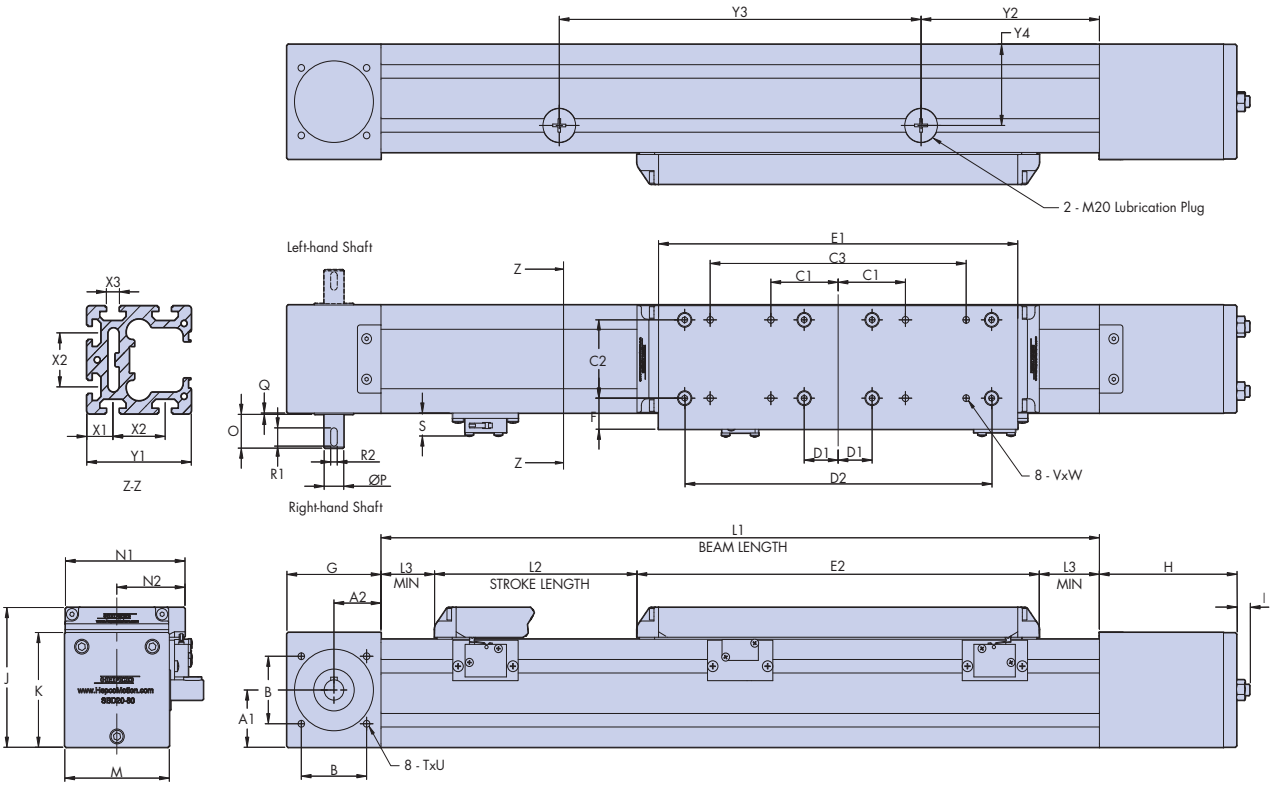

SBD Unit	A1	A2	B	C1	C2	C3	D1	D2	E1	E2	F	G	H	I	J	K	L1 (min)	L2 Nominal Stroke	L3 (min)
SBD20-80	42.4	36	50	51.5	58	196	26	235	275	308	23	72	105	12	103.5	85	550	L1 - 390	41
SBD30-100	51.6	48	65	65	76	260	46	295	340	373	24.5	96	145.5	13	123.5	105	580	L1 - 470	48.5

SBD Unit	M	N1	N2	O	P	Q	R1	R2	S	TxU	VxW	X1	X2	X3	Y1	Y2	Y3	Y4
SBD20-80	80	91.5	52	25	15	1	13.5	5	17	M6 x 15	M6 x 9.5	20	40	10	80	162.5	205	60
SBD30-100	100	112	62.5	36	20	1	22	6	17	M6 x 15	M8 x 9.5	30	40	10	100	164	252.5	70

SBD Long Carriage Option

The cleanroom version of the SBD unit has been designed to meet an increasing demand for clean manufacturing processes and environments. This version of the SBD unit is ready for connection to vacuum extraction which minimises particle emissions. All external parts are made from anodised aluminium or stainless steel. This SBD cleanroom unit is certified by the Fraunhofer IPA Institute for use in cleanroon environments and meets air cleanliness class 3 according to ISO 14644-1. For further details please visit **www.HepcoMotion.com/sbddatauk** and select datasheet No. 5 cleanroom qualification. The main dimensions of the cleanroom long carriage SBD units are shown below. Further details can be obtained from the 3D CAD files available from Hepco's technical department or at **www.HepcoMotion.com**.

Fraunhofer TESTED® DEVICE
IPA
HepcoMotion
SBD30-100 linear drive unit
Report No. HE 0607-357

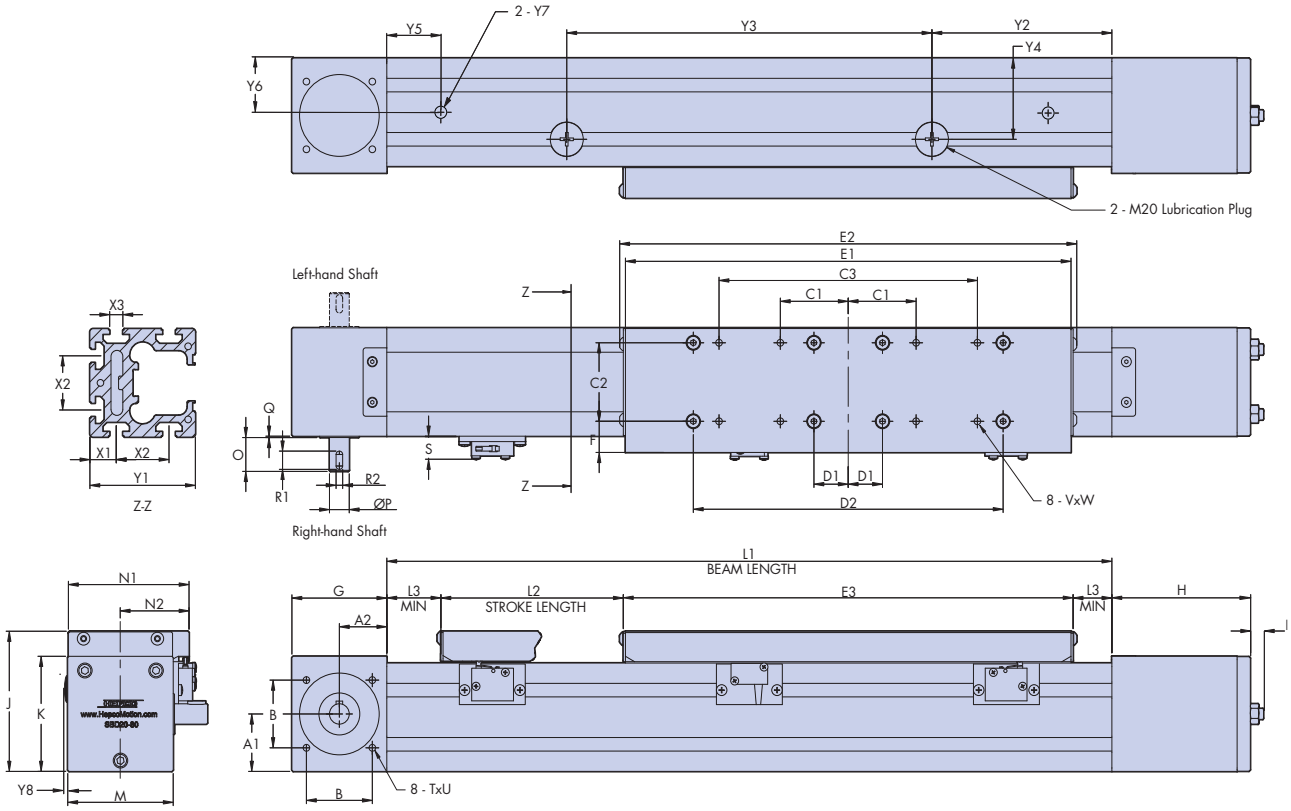

SBD Unit	A1	A2	B	C1	C2	C3	D1	D2	E1	E2	E3	F	G	H	I	J	K	L1 (min)	L2 Nominal Stroke	L3 (min)
SBD20-80	42.4	36	50	51.5	58	196	26	235	338	347	341	23	72	105	12	103.5	85	550	L1 - 390	24.5
SBD30-100	51.6	48	65	65	76	260	46	295	404	413	407	24.5	96	145.5	13	123.5	105	580	L1 - 470	31.5

SBD Unit	M	N1	N2	O	P	Q	R1	R2	S	TxU	VxW	X1	X2	X3	Y1	Y2	Y3	Y4	Y5	Y6	Y7	Y8
SBD20-80	80	91.5	52	25	15	1	13.5	5	17	M6 x 15	M6 x 9.5	20	40	10	80	162.5	205	60	40	40	1/4" BSPP	2
SBD30-100	100	112	62.5	36	20	1	22	6	17	M6 x 15	M8 x 9.5	30	40	10	100	164	252.5	70	40	50	3/8" BSPP	2

The vacuum extraction connection holes (see dimensions Y5 & Y6) can be repositioned to suit customer requirements or deleted. Hepco can supply vacuum connections pre-fitted on request.

Technical Data

The nominal load capacities for the SBD long carriage units are based on LBG ball guide dynamic load capacities combined with a mounting factor of 0.8 (see LBG catalogue 📖19). They are shown in the table below for each of the 5 direct and moment loading directions. For guidance on load life calculations please refer to the SBD catalogue 📖8 and visit **www.HepcoMotion.com/sbddatauk** and select datasheet No.2 load life calculations.

SBD Unit	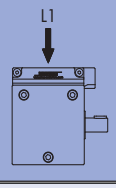	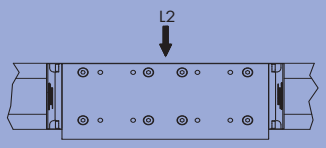	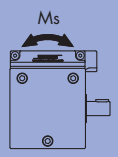	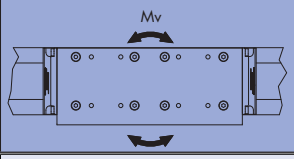	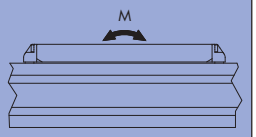
SBD20-80	33920N	33920N	302Nm	1150Nm	1150Nm
SBD30-100	68800N	68800N	848Nm	2990Nm	2990Nm

The table below includes the parameters necessary to calculate the performance and duty of an SBD system.

Parameter			SBD20-80		SBD30-100	
			Standard	Cleanroom	Standard	Cleanroom
Mass of carriage	Mc	kg	2.3	2.5	5.2	5.5
Mass of belt per m	Mb	kg/m	0.12		0.34	
Mass of SBD unit	Mu	kg	9.7 x L + 6.9	9.7 x L + 7.2	15.7 x L + 13.7	15.7 x L + 14.0
Pulley radius	r	cm	2.39		3.5	
Drive efficiency			0.9		0.9	
Break away friction	Fba	N	29	14	46	36
Coefficient of friction	μ		0.01		0.01	
Beam moment of inertia*	I_{x-x}	mm^4	1500000		3700000	
	I_{y-y}		1800000		4600000	
Max linear force (belt)	Fmax	N	1000		3300	
Linear movement per shaft rev		mm	150		220	
Belt tooth pitch		mm	5		10	
LBG carriage basic load rating (dynamic)	C	N	33920		68800	

* The beam moment of inertia figure is used in the calculation of beam deflection, with a high figure corresponding to a stiff beam. For further guidance on beam deflection calculations please visit **www.HepcoMotion.com/sbddatauk** and select datasheet No. 3 SBD beam deflection calculations.

Ordering Details

SBD 20-80 L1750 C2 RS B2

SBD = product range

Size of unit: Choose **20-80** or **30-100**

Beam Length. Beams lengths available in increments of 60mm from 550mm for SBD20-80 and increments of 80mm from 580mm for SBD30-100, see 📖11 & 12

Unit type: **C1** = corrosion resistant; **C2** = cleanroom; leave **blank** for standard unit

Drive shaft: **LS** for left-hand; **RS** for right-hand; **DS** for double shaft

Long carriage option with twin LBG bearing blocks: **B2**

SBD 15-60

The **Hepco**Motion® SBD 15-60 is a new smaller addition to the SBD range of linear actuators. It shares the key features and benefits of the existing SBD range, but using a HepcoMotion LBC15 Linear Ball Guide. Units are supplied in increments of 60mm up to 6000mm in one piece, and unlimited lengths can be achieved with joined beams. The nominal stroke is calculated with the carriage against the internal buffers. In practice a clearance should be provided to allow for overrun. The main dimensions of the standard unit are shown below. Further details can be obtained from Hepco's technical department.

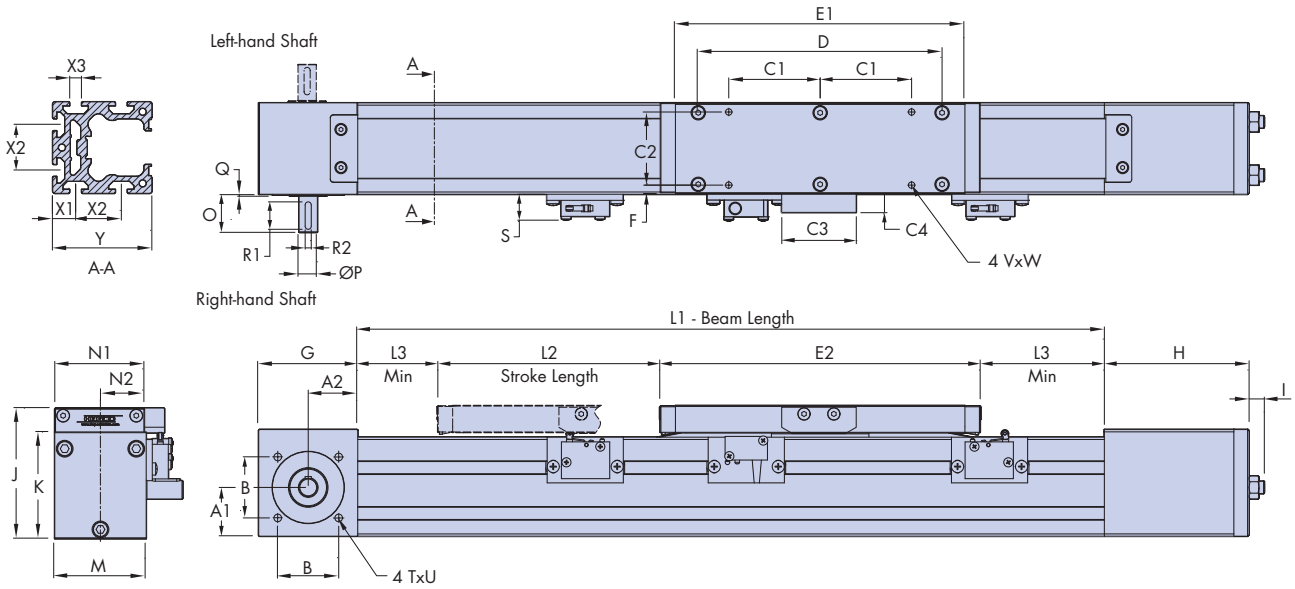

SBD Unit	A1	A2	B	C1	C2	C3	C4	D	E1	E2	F	G	H	I	J	K	L1 (min)	L2 Nominal stroke	L3 (min)
SBD15-60	32	33	41	60	48	50	12.5	150	180	200	5.5	65	95	11	84	70	550	L1-240	20

SBD Unit	M	N1	N2	O	P	Q	R1	R2	S	TxU	VxW	X1	X2	X3	Y	Y2	Y3	Y4
SBD15-60	60	59	29.5	25	12	1	18	4	17	M5x10	M5x8	15	30	8	65	250	43	M15

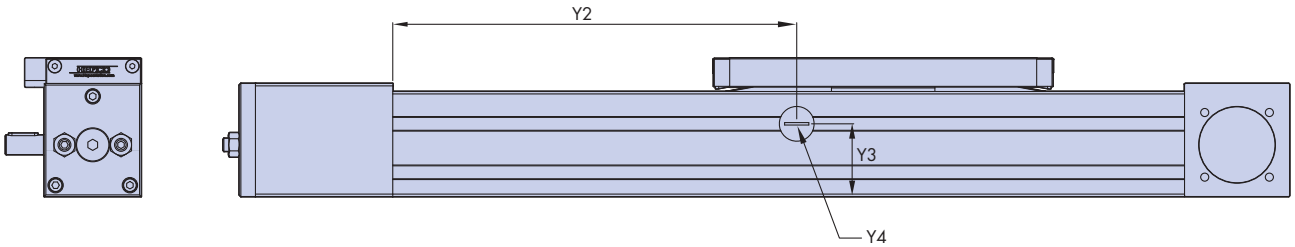

Re-lubrication of the ball guide carriage block is via an access point in the side of the beam (see above), which is closed off with a threaded plug. The lubrication interval depends on the length of stroke, speed and duty. For further details regarding lubrication procedures please contact Hepco's technical department.

SBD15-60 - Long Carriage Option

The SBD15-60 unit is available with a long carriage version, this option has two LBG bearing blocks in the carriage and has much improved load capacity particularly in the M & Mv directions. The main dimensions of the long carriage units are shown below. Further details can be obtained from Hepco's technical department.

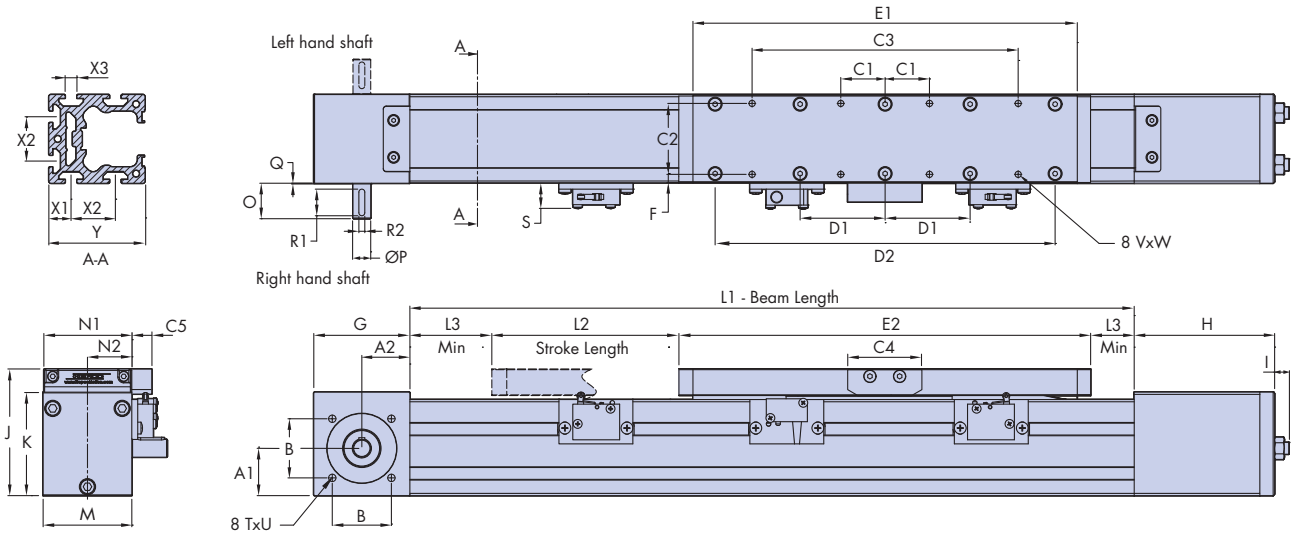

SBD Unit	A1	A2	B	C1	C2	C3	C4	C5	D1	D2	E1	E2	F	G	H	I ~	J	K	L1 (min)	L2 Nominal stroke	L3 (min)
SBD15-60	32	33	41	30	48	180	50	12.5	57.5	220	250	270	5.5	65	95	11	84	70	550	L1-310	20

SBD Unit	M	N1	N2	O	P	Q	R1	R2	S	TxU	VxW	X1	X2	X3	Y	Y1	Y2	Y3
SBD15-60	60	59	29.5	25	12	1	18	4	17	M5x10	M5x8	15	30	8	65	250	158	43

(All dimensions in mm)

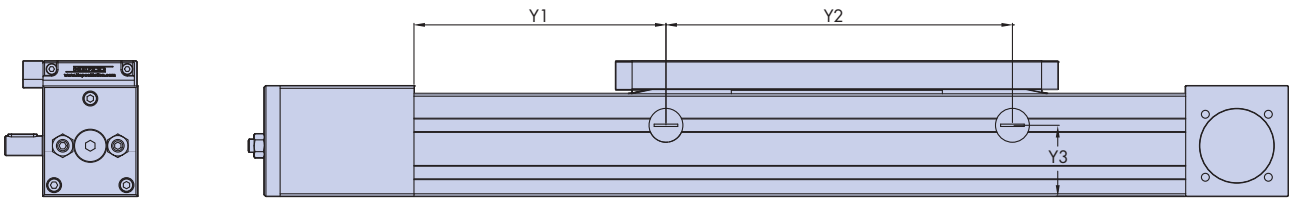

Re-lubrication of the ball guide carriage blocks is via two access points in the side of the beam (see above), and closed off with a threaded plug. The lubrication interval depends on length of stroke, speed and duty. For further details regarding lubrication procedures please contact Hepco's technical department.

Technical Information

The nominal load capacities for the SBD (based on LBG ball guide dynamic load capacity) and a typical load corresponding to 10 000km*1 travel are included in the table below for each of the 5 direct and moment loading directions*2.

SBD Unit	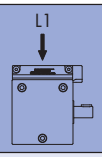	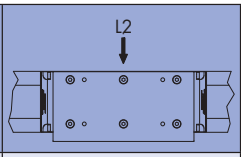		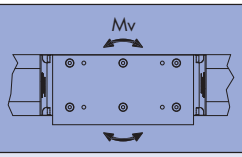	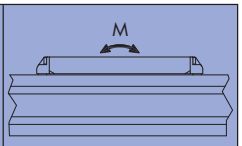
SBD15-60	8500N nominal (13600N) 726 @ 10 000km	8500N nominal (13600N) 726N @ 10 000km	52Nm nominal (82Nm) 4.4Nm @ 10 000km	41Nm nominal (350Nm) 3.5Nm @ 10 000km	41Nm nominal (350Nm) 3.5Nm @ 10 000km

(Figures shown in brackets relate to the long carriage version.)

The table below includes the parameters necessary to calculate the performance and duty of the SBD system.

Parameter			**SBD15-60**	**SBD15-60**
			Standard	**Long Carriage**
Mass of carriage	Mc	kg	0.8	1.3
Mass of belt per m	Mb	kg/m	0.09	0.09
Mass of SBD unit	Mu	kg	5.5 x L + 2.9	5.5 x L + 3.4
Pulley radius	r	cm	1.91	1.91
Drive efficiency			0.9	0.9
Break away friction	Fba	N	24	28
Coefficient of friction	μ		0.01	0.01
Beam moment of inertia*3	I_{x-x}	mm^4	560000	560000
	I_{y-y}		600000	600000
Max linear force (belt)	Fmax	N	700	700
Linear movement per shaft rev		mm	120	120
Belt tooth pitch		mm	5	5
LBG carriage basic load rating (dynamic)	C	N	16500	26400

Ordering Details

SBD 15-60 L1740 C1 RS B2

SBD = product range

Size of unit : **15-60**

Beam Length. Beam lengths are available in increments of 60mm from 550mm

Unit Type: **C1** = corrosion resistant; leave **blank** for standard units

Drive shaft: **LS** for left-hand; **RS** for right-hand; **DS** for double shaft

Long Carriage Option with twin LBG bearing blocks: **B2**

1. The tabulated load figures above for 10,000km assume a value for variable load factor f_v = 2 which is suitable for most applications.
2. For load & life calculations please refer to 📖8 of the SBD catalogue.
3. The beam moment of inertia figure is used in the calculation of beam deflection, with a high figure corresponding to a stiff beam. For further guidance on beam deflection calculations please visit **www.HepcoMotion.com/sbddatauk** and select datasheet No. 3 SBD beam deflection calculations.

Notes:

Notes:

HepcoMotion® Product Range

GV3
Linear Guidance and Transmission System

HDS2
Heavy Duty Slide System

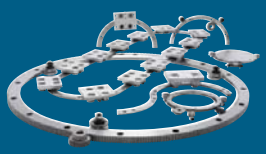

PRT2
Ring Slides and Track System

HDRT
Heavy Duty Ring Slides and Track System

SL2
Stainless Steel Based Slide System

LBG
Linear Ball Guides

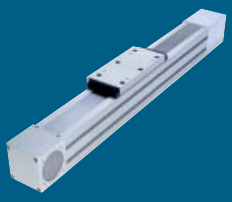

SBD
Sealed Belt Drive

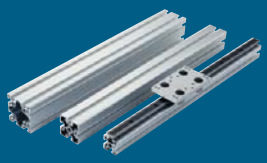

MCS
Aluminium Frame and Machine Construction System

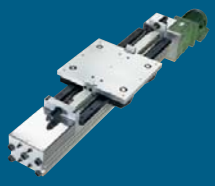

HDLS
Heavy Duty Driven Linear System

DLS
Linear Transmission and Positioning System

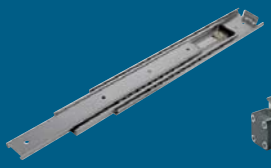

HTS
Telescopic Ball Bearing Slides

HPS
Powerslide-2 Guided Rodless Cylinder

MHD
Heavy Duty Track Roller Guidance System

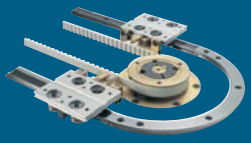

DTS
Driven Track System

BSP
Ballscrew Premier

Simple Select®
Vee Slide Linear Guidance Systems

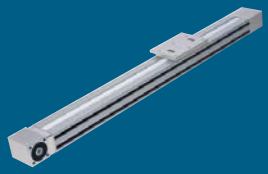

PDU2
Profile Driven Unit

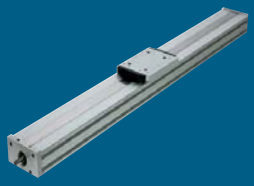

PSD120
Profile Screw Driven Unit

Bishop-Wisecarver Product Range

HepcoMotion® – Exclusive European partners and distributors for Bishop-Wisecarver since 1984.

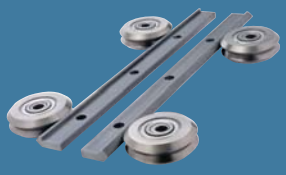

DUALVEE®
Single Edge Slide System

LoPro®
Aluminium Based Slide System

UtiliTrak®
Lightweight U Channel Guideway

For further information on HepcoMotion® products – please request our leaflet 'FPL'

HepcoMotion®
www.HepcoMotion.com

INVESTOR IN PEOPLE

Lower Moor Business Park, Tiverton Way, Tiverton, Devon, England EX16 6TG
Tel: +44 (0)1884 257000 Fax: +44 (0)1884 243500
E-mail: sales@hepcomotion.com

ISO 9001 BUREAU VERITAS Certification

Scan this QR Code to Link Directly to the HepcoMotion Homepage

HepcoMotion®

HDLS

Heavy duty linear transmission system

Système de transmission linéaire de forte capacité

Hochleistungsachse

FOR AMENDMENTS & UPDATES VISIT www.HepcoMotion.com and select literature button

Contents

Inhalt

Sommaire

Using this catalogue

This catalogue is intended to provide an overview of the HDLS to facilitate initial selection. Hepco's highly trained engineers will assist with the design requirements and final specification.

For further details see our website at www.HepcoMotion.com

The HDLS uses various standard Hepco components which are detailed in the following catalogues: HDS2 heavy duty slide system, DLS linear transmission and positioning system and SH shock absorbers.

Express CAD file service

A CAD file will be created to the exact configuration and length you require in either 2D or 3D format. This will be e-mailed or posted to you by return service.

Zu diesem Katalog

Diese Broschüre soll nur einen Überblick zur HDLS liefern, um die Vorauswahl zu erleichtern. HEPCOs qualifizierte Ingenieure werden Ihnen bei der Auslegung und Gestaltung gerne behilflich sein.

Für weitere Informationen besuchen Sie unsere Webseite unter www.HepcoMotion.com.

HDLS verwendet einige Standardkomponenten von HEPCO, die in folgenden Katalogen näher beschrieben sind: HDS2 - Hochleistungssystem, DLS - Lineares Führungs- und Positioniersystem sowie SH - Stoßdämpfer.

CAD Express - Service

Aufgrund Ihrer Angaben wird ein 2D- oder 3D-CAD-Modell in gewünschter Ausführung und Länge erstellt, das Ihnen per E-Mail oder Briefpost zugeht.

Utilisation du catalogue

Ce catalogue a pour but de présenter l'unité HDLS pour faciliter le choix initial d'un modèle. Le personnel spécialisé de Hepco vous conseillera ensuite pour définir exactement le matériel qui répond à votre besoin.

Visitez notre site Web pour plus de détails: www.HepcoMotion.com

L'unité HDLS utilise des composants standard documentés dans les catalogues suivants : guidage pour fortes charges HDS2, système de translation et de positionnement DLS, et amortisseurs SH.

Service express fichier CAO

Un fichier CAO sera créé selon la longueur et la configuration exacte que vous souhaitez, en format 2D ou 3D, et vous sera transmis aussitôt par E-mail ou par courrier.

Introduction

HDLS uses components from the Hepco Heavy Duty product range to make a very strong and efficient range of linear transmissions.

The units are driven via steel reinforced timing belts and incorporate substantial aluminium beams to allow the movement of heavy loads over wide spans.

Units can be supplied with an AC geared motor for a simple and cost effective means of driving. Alternatively they can be supplied with integral gearbox to suit your own motor, or with shaft drive.

Units can be connected together to make X-Y and X-Y-Z systems.

Einleitung

HDLS verwendet Komponenten aus HEPCOs Hochleistungssystem für eine tragfähige und stabile Linearachse.

Die Einheit besteht aus einem stabilen Aluminiumprofil. Sie wird über stahlverstärkte Zahnriemen angetrieben, um auch bei großen Hüben schwere Lasten bewegen zu können.

Die Achsen können mit Asynchronmotor für einfachen und preiswerten Antrieb geliefert werden oder mit integriertem Getriebe bzw. einfacher Welle, um Ihre Antriebslösung aufzunehmen.

Sie können zu X-Y- oder X-Y-Z-Einheiten kombiniert werden.

Introduction

Les unités HDLS, qui utilisent des composants du guidage Hepco pour fortes charges, forment une gamme d'axes très robustes et efficaces.

Ces unités sont entraînées par des courroies crantées à armature métallique, et comportent un corps en aluminium fortement dimensionné, acceptant des charges lourdes sur de longues portées.

Des motoréducteurs asynchrones peuvent être fournis pour assurer un entraînement simple et économique. Les unités peuvent aussi être livrées avec réducteur seul, ou arbre moteur nu.

Elles peuvent être assemblées pour former un ensemble XY ou XYZ.

HDLS Benefits

STRONG: • Rugged construction permits loads up to 40kN; • Steel reinforced timing belt allows driving forces of 7.35kN or greater; • Heavy duty beam ensures rigidity when used as part of a machine frameworks.

POWERFUL: • AC geared motor option enables driving forces in excess of 5kN.

FAST: • Bearing based V slide system allows speeds in excess of 6m/s.

DURABLE: • Rugged construction - All steel hardened slideway - unique wiping action excludes debris.

VERSATILE: • 3 formats available for diverse uses (see pages 2-4); • Lengths up to 6m in one piece. Unlimited with joins; • 2 sizes of carriage available to suit required duty; • T-slots, T-nuts and fixing brackets for easy mounting.

LOW MAINTENANCE: • Lubrication devices maximise life, with no re-lubrication required in many cases.

HDLS - Vorteile

TRAGFÄHIG: • Stabile Konstruktion erlaubt Lasten bis 40kN; • Stahlverstärkter Zahnriemen für Antriebskräfte von 7,35kN und mehr; • Hochleistungsprofil mit hoher Steifigkeit für selbsttragenden Einsatz.

KRÄFTIG: • Mit Asynchronmotor Antriebskräfte über 5kN möglich.

SCHNELL: • V-Führungsprinzip erlaubt Verfahrgeschwindigkeiten von 6 m/sec und mehr.

LANGLEBIG: • Robuste Konstruktion mit einteiliger gehärteter Stahlschiene - einzigartiger Selbstreinigungseffekt.

VIELSEITIG: • Drei Bauarten lieferbar für verschiedene Anwendungen (vgl. S.2-4); • Einteilig bis zu 6m Länge lieferbar, unbegrenzte Länge durch gefügte Einheiten; • Zwei Trägerplattengrößen nach Bedarf erhältlich; • T-Nuten, T-Nutensteine und Befestigungsklemmen vereinfachen Montage.

WARTUNGSARM: • Schmiereinrichtungen verlängern Lebensdauer, Nachschmieren meistens nicht mehr nötig.

Avantages HDLS

ROBUSTESSE: • Forte capacité de charge, jusqu'à 40kN.; • Courroie armée, force d'entraînement jusqu' à 7,35kN et plus; • Corps de forte capacité, assez rigide pour former un élément de structure.

PUISSANCE: • Motoréducteurs asynchrones donnant une force d'entraînement de plus de 5kN.

VITESSE: • Guidage sur galets en V, permettant des vitesses de plus de 6m/s.

DUREE DE VIE: • Construction robuste - rails en acier massif trempé - fonctionnement auto-nettoyant des galets.

SOUPLESSE: • 3 types convenant à différentes applications (voir pages 2-4); • Longueur jusqu'à 6m d'un seul tenant, et plus avec assemblage; • 2 tailles de chariot; • Rainures en T et écrous pour facilité de montage.

PEU D'ENTRETIEN : • Le système de graissage optimise la durée de vie, et ne demande souvent aucune intervention.

System Composition

HDLS can be specified in three formats as detailed on this and the following two pages. All features and attributes specified on these pages apply to all 3 formats unless otherwise stated.

Wide Unit

Wide units have the slides spaced further apart for increased moment load capacity and have a larger carriage for attaching big components. They can also be specified with wider belts for greater pulling power.

Systemaufbau

Wie auf diesen Seiten gezeigt wird, gibt es HDLS in drei Varianten. Sofern nichts anderes vermerkt ist, gelten die Angaben für alle Varianten.

Breite Einheit

Bei der Breiten Einheit sind die Führungsschienen zur besseren Momentenaufnahme weit auseinander gesetzt. Sie besitzt eine große Trägerplatte zur Aufnahme entsprechender Komponenten. Die Breite Einheit kann auch mit breiterem Zahnriemen für erhöhte Antriebskraft bestellt werden.

Composition du Système

HDLS est disponible en 3 versions, décrites sur cette page et les deux suivantes. Sauf indication contraire, toutes les caractéristiques et éléments décrits existent pour les 3 versions.

Unité de Type Large

Sur les unités larges, les rails, plus écartés, ont une plus grande capacité en moment transversal, et les dimensions du chariot permettent le montage de composants de grande taille. Des courroies plus larges, permettant une plus grande force de traction, sont aussi disponibles.

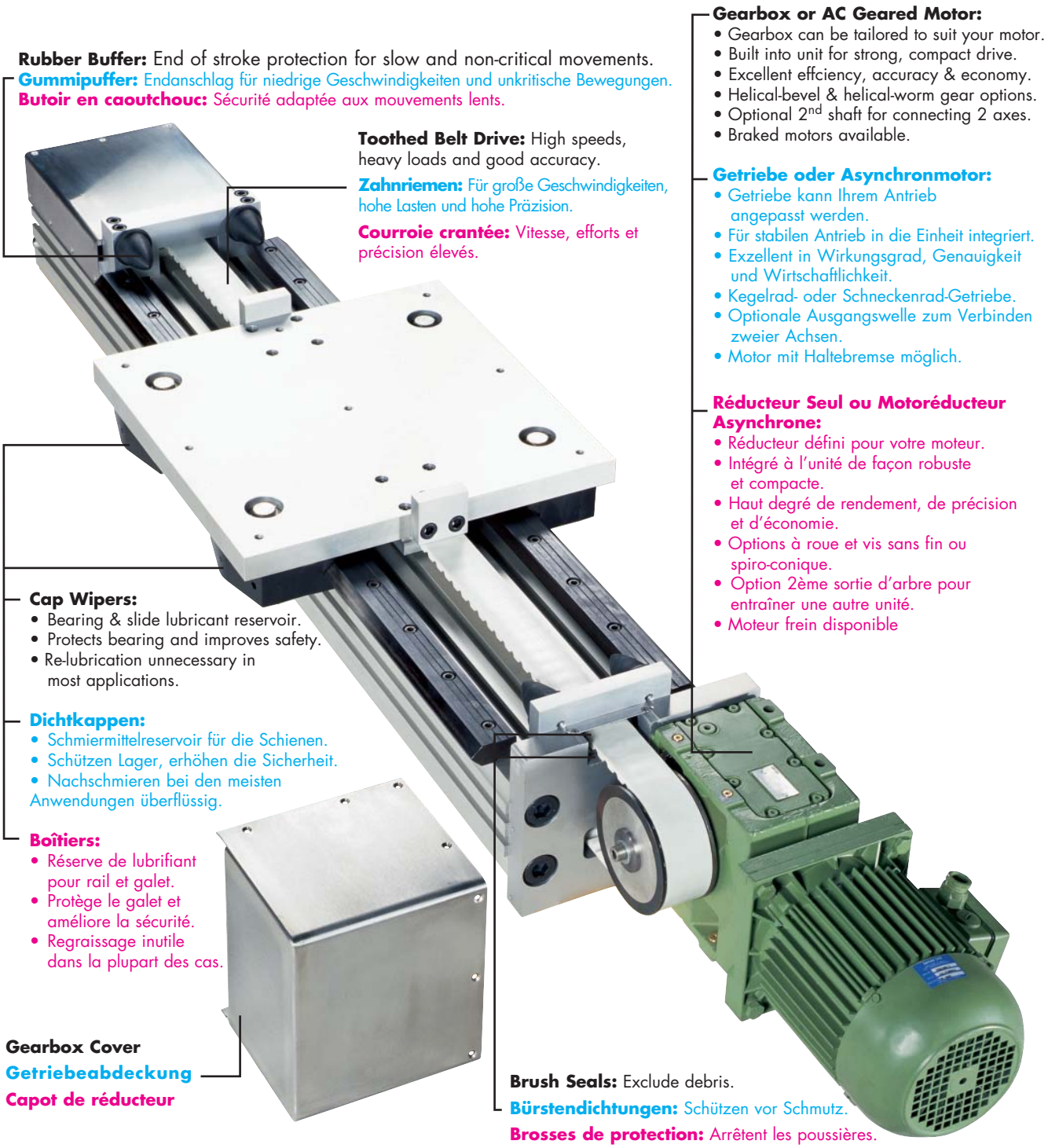

System Composition

HDLS can be specified in three formats as detailed on this plus pages 2 & 4. All features and attributes specified on these pages apply to all 3 formats unless otherwise stated.

Narrow Unit

Narrow units have the slides mounted on the narrow face allowing the greater dimension of the beam to resist deflection. This may be useful for high direct loads and long spans. A single belt width of 50mm is available for this unit.

Systemaufbau

Wie auf diesen Seiten gezeigt wird, gibt es HDLS in drei Varianten. Sofern nichts anderes vermerkt ist, gelten die Angaben für alle Varianten.

Schmale Einheit

Die Schmale Einheit hat die Führungsschienen auf der Schmalseite des Profils. Das gibt ihr durch die größere Biegesteifigkeit höhere Stabilität, was bei hohen Lasten oder großer freitragender Länge wichtig ist. Sie ist nur mit 50mm breitem Zahnriemen erhältlich.

Composition du Système

HDLS est disponible en 3 versions, décrites sur cette page et les pages 2 et 4. Sauf indication contraire, toutes les caractéristiques et éléments décrits existent pour les 3 versions.

Unité de Type Étroit

Dans cette version, les rails sont montés sur le côté étroit du corps, son grand côté offrant la meilleure résistance à la flexion pour les cas d'effort centré et de grande portée. Cette unité accepte une seule largeur (50mm) de courroie.

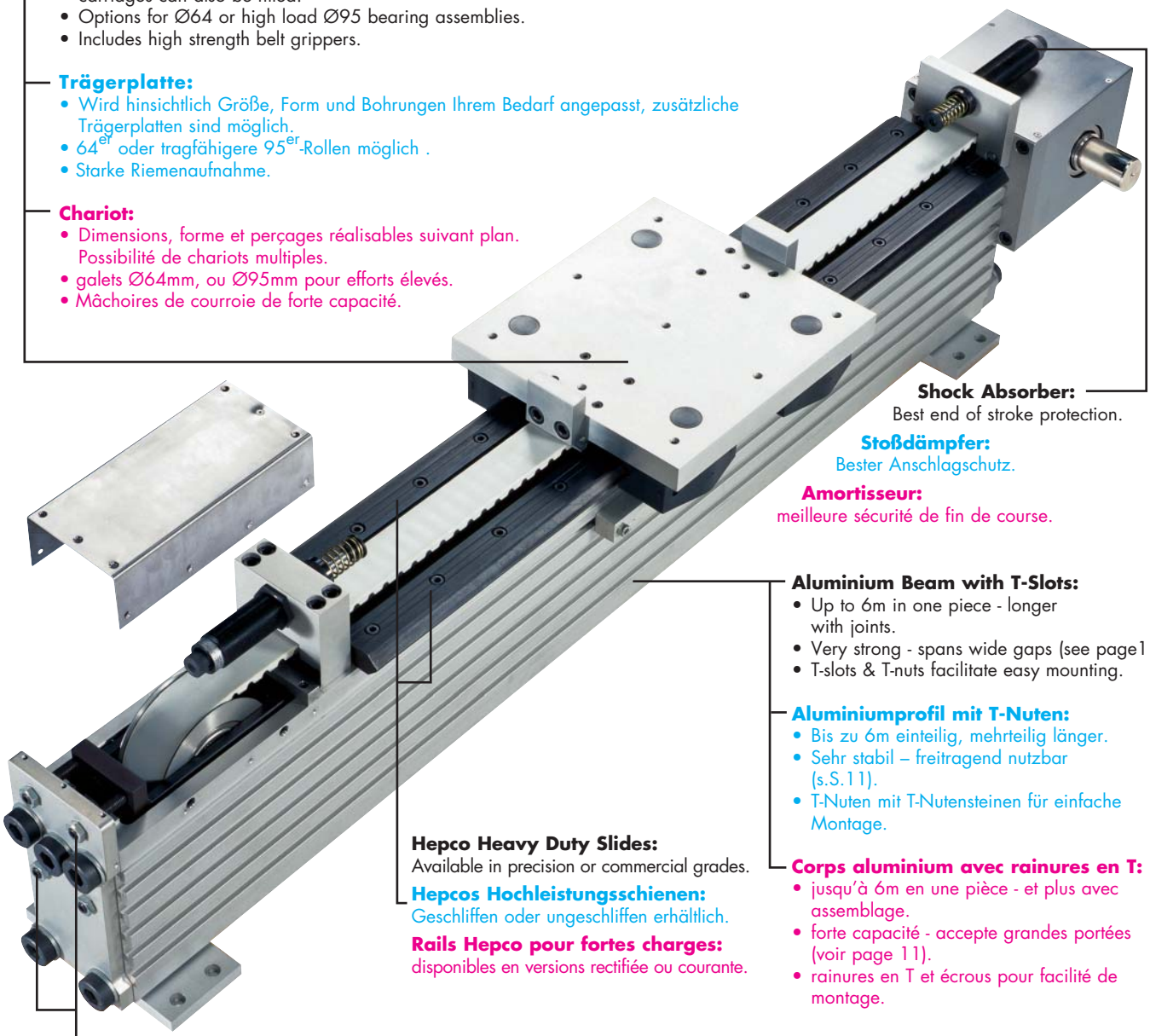

Carriage:
- Can be customised to your size, shape and hole requirements. Additional carriages can also be fitted.
- Options for Ø64 or high load Ø95 bearing assemblies.
- Includes high strength belt grippers.

Trägerplatte:
- Wird hinsichtlich Größe, Form und Bohrungen Ihrem Bedarf angepasst, zusätzliche Trägerplatten sind möglich.
- 64er oder tragfähigere 95er-Rollen möglich .
- Starke Riemenaufnahme.

Chariot:
- Dimensions, forme et perçages réalisables suivant plan. Possibilité de chariots multiples.
- galets Ø64mm, ou Ø95mm pour efforts élevés.
- Mâchoires de courroie de forte capacité.

Shock Absorber:
Best end of stroke protection.

Stoßdämpfer:
Bester Anschlagschutz.

Amortisseur:
meilleure sécurité de fin de course.

Aluminium Beam with T-Slots:
- Up to 6m in one piece - longer with joints.
- Very strong - spans wide gaps (see page11).
- T-slots & T-nuts facilitate easy mounting.

Aluminiumprofil mit T-Nuten:
- Bis zu 6m einteilig, mehrteilig länger.
- Sehr stabil – freitragend nutzbar (s.S.11).
- T-Nuten mit T-Nutensteinen für einfache Montage.

Corps aluminium avec rainures en T:
- jusqu'à 6m en une pièce - et plus avec assemblage.
- forte capacité - accepte grandes portées (voir page 11).
- rainures en T et écrous pour facilité de montage.

Hepco Heavy Duty Slides:
Available in precision or commercial grades.

Hepcos Hochleistungsschienen:
Geschliffen oder ungeschliffen erhältlich.

Rails Hepco pour fortes charges:
disponibles en versions rectifiée ou courante.

Belt Tensioning: simply slacken the four lock nuts & set screws + tension belt with hexagon key.

Riemenspannung: Einfach vier Befestigungsschrauben lösen und mit Ringschlüssel Spannung einstellen.

Réglage de tension de la courroie: Desserrer les 4 écrous de blocage et les vis d'arrêt, puis tendre la courroie avec une clé à 6 pans

Application Examples

Anwendungsbeispiele

Exemples d'applications

Winkeleinheit: Diese Alternative empfiehlt sich, wenn zwei Achsen parallel betrieben werden. Sie ist mit den gleichen Optionen lieferbar wie die Schmale Einheit. Entsprechende Details entnehmen Sie bitte S.2f., wo Breite und Schmale Einheit dargestellt sind.

Unité de type latéral: cette version peut être utile si deux axes fonctionnent en parallèle. Elle comporte les mêmes options que la version étroite. Les éléments et détails sont illustrés aux pages 2 et 3 décrivant les unités larges et étroites.

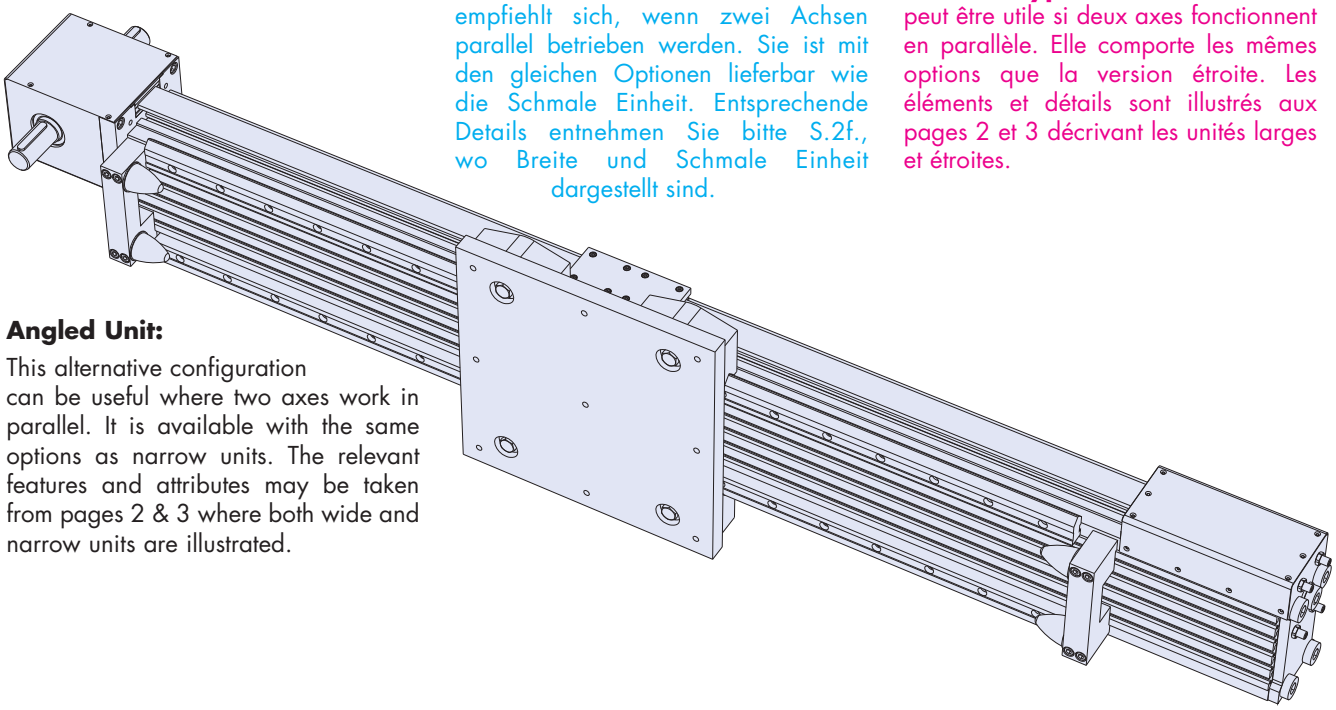

Angled Unit:
This alternative configuration can be useful where two axes work in parallel. It is available with the same options as narrow units. The relevant features and attributes may be taken from pages 2 & 3 where both wide and narrow units are illustrated.

Door Handling System: The unit incorporates two angled type HDLS units, one with a geared motor, and linked with a drive shaft. The lifting mechanism is suspended from a Hepco HB25 beam, the same as used in the HDLS and which is detailed in the Hepco HDS2 catalogue.

Entnahmesystem für Türen: Anlage aus zwei HDLS-Winkeleinheiten, die mittels Antriebswelle verbunden sind, Antrieb einer HDLS über Getriebemotor. Der Hebemechanismus hängt an einem HB25-Profil, das auch für die HDLS Verwendung findet und in HEPCOs HDS2-Katalog beschrieben ist.

Empileur-dépileur de portes: Cet ensemble comprend deux unités HDLS de type latéral, dont une avec motoréducteur, reliées par un arbre. Le préhenseur est suspendu à une poutre Hepco HB25, identique au corps des unités HDLS, et décrite dans le catalogue Hepco HDS2.

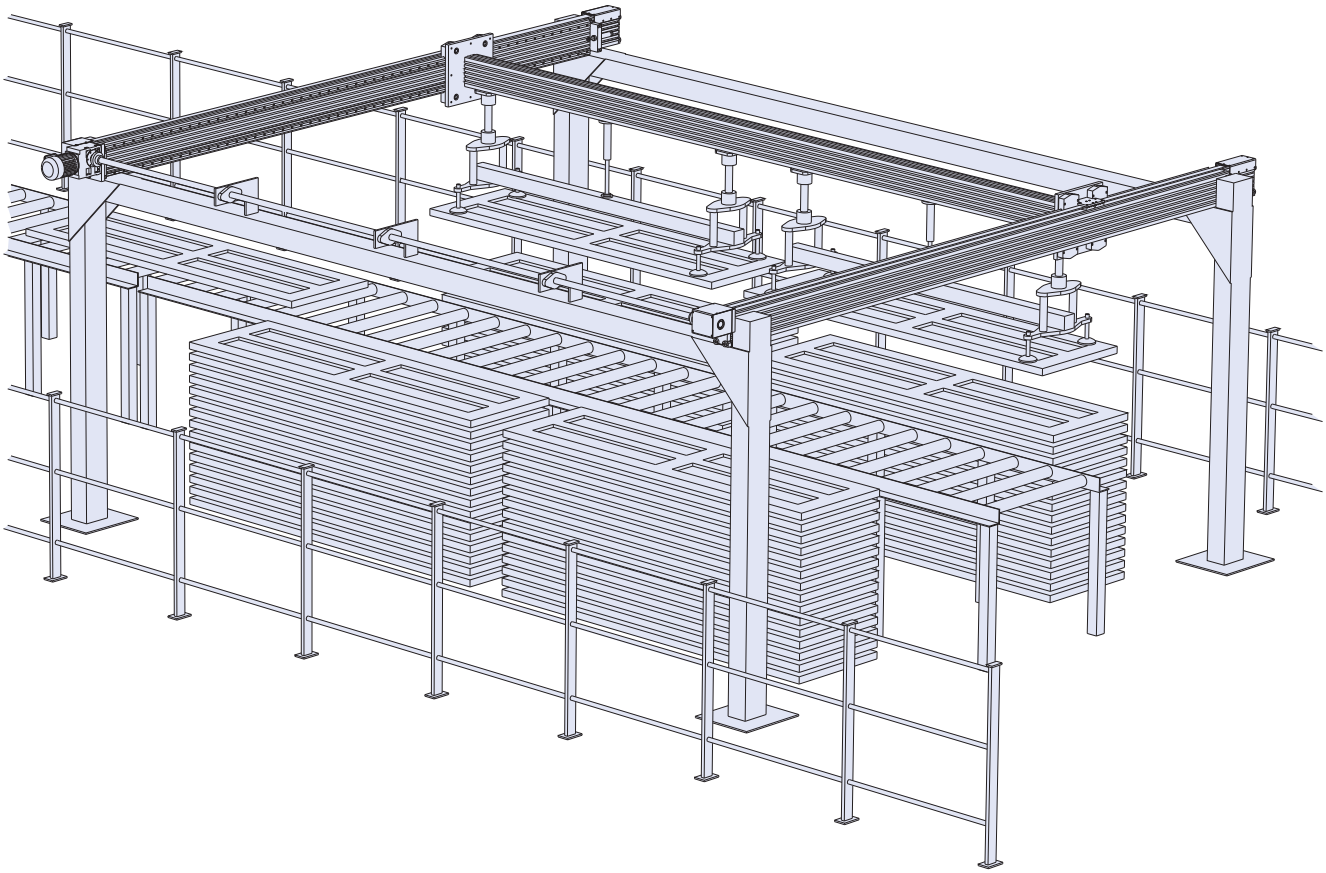

Application Examples

Anwendungsbeispiele

Exemples d'applications

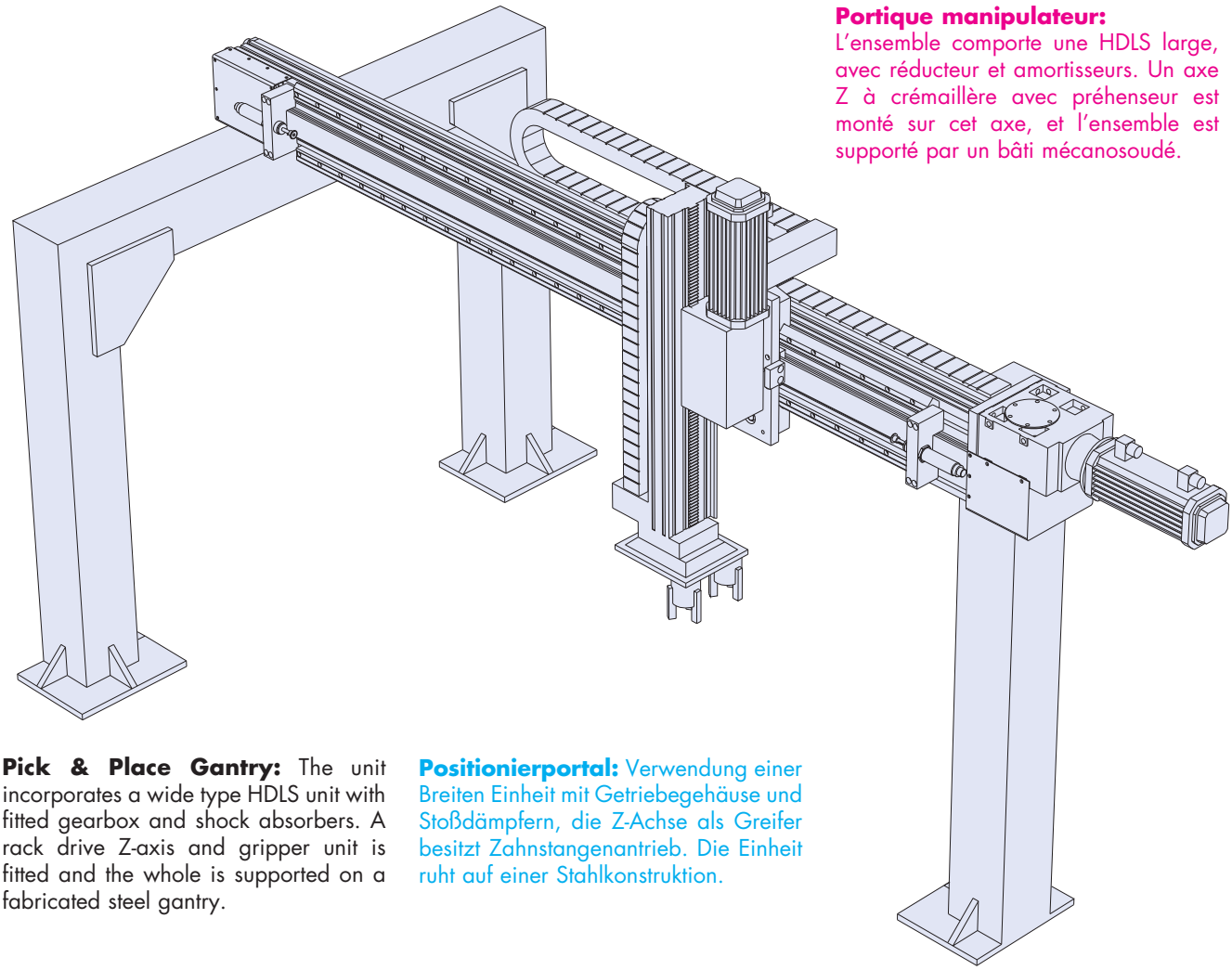

Portique manipulateur: L'ensemble comporte une HDLS large, avec réducteur et amortisseurs. Un axe Z à crémaillère avec préhenseur est monté sur cet axe, et l'ensemble est supporté par un bâti mécanosoudé.

Pick & Place Gantry: The unit incorporates a wide type HDLS unit with fitted gearbox and shock absorbers. A rack drive Z-axis and gripper unit is fitted and the whole is supported on a fabricated steel gantry.

Positionierportal: Verwendung einer Breiten Einheit mit Getriebegehäuse und Stoßdämpfern, die Z-Achse als Greifer besitzt Zahnstangenantrieb. Die Einheit ruht auf einer Stahlkonstruktion.

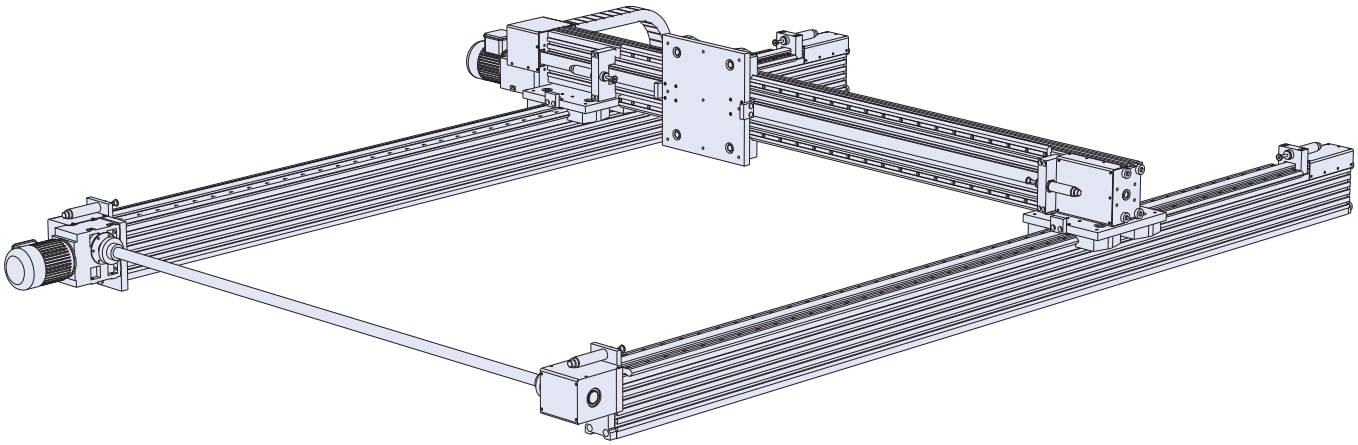

X-Y System: The unit uses two narrow type HDLS units for the X-axis, one with a geared motor, and linked with a drive shaft. The Y-axis is a wide unit, which is bolted directly to the carriages of the narrow units. Shock absorbers are specified throughout.

X-Y-System: Zwei Schmale Einheiten mit Antriebswelle dienen als X-Achse, eine wird über Getriebemotor bewegt. Eine Breite Einheit arbeitet als Y-Achse, sie ist direkt auf die Trägerplatten der Schmalen Einheiten montiert. Überall Verwendung von Stoßdämpfern.

Ensemble X-Y: Cet ensemble utilise pour l'axe X deux HDLS de type étroit, dont une avec motoréducteur, reliées par un arbre.

L'axe Y est une unité large, fixée directement sur les chariots des unités X. Des amortisseurs équipent toutes les fins de course.

Narrow Unit Dimensions

This section includes the major dimensions of the HDLS with various options to assist in initial selection.

For complete data on units of interest, contact Hepco, who will supply an accurate CAD model, which should be used for final selection and design.

Maße der Schmalen Einheit

Dieser Abschnitt beschreibt die wichtigsten Maße der verschiedenen Varianten von HDLS zur Erleichterung der Vorauswahl.

Für vollständige Daten bei konkreten Anwendungen wenden Sie sich bitte an HEPCO. Wir liefern Ihnen ggf. ein genaues CAD-Modell, das Sie für Ihre Konstruktion verwenden können.

Dimensions de l'unité étroite

Cette section donne les dimensions principales des unités, et les différentes options, pour permettre un choix initial.

Pour avoir une description complète d'une unité donnée, adressez-vous à Hepco, qui réalisera un dessin CAO complet pour aider à la définition finale de l'unité.

The narrow unit below is shown with the following features:

- Double shaft drive.
- Carriage with 95Ø bearings.
- 50mm wide belt (only option on narrow units).
- Shock absorbers.

Untenstehende Schmale Einheit ist in folgender Variante dargestellt:

- Antriebswelle mit Abtriebsoption.
- Trägerplatte mit 95er Lagern.
- 50mm Zahnriemen (einzige Option für Schmale Einheit).
- Stoßdämpfer.

L'unité de type étroit ci-dessous a les caractéristiques suivantes:

- Double sortie d'arbre,
- Chariot avec galets Ø95mm.
- Courroie de largeur 50mm (seule option pour type étroit).
- Amortisseurs.

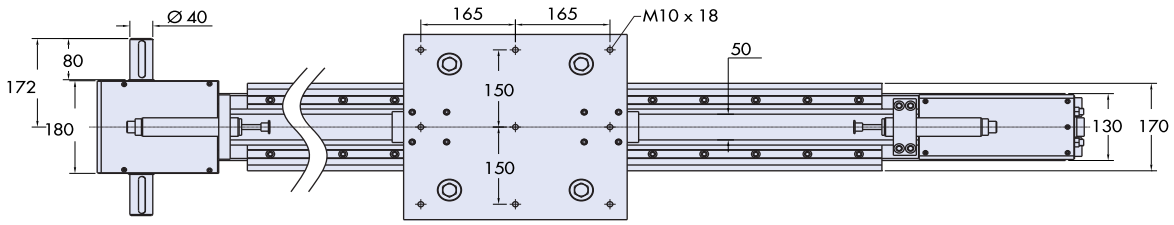

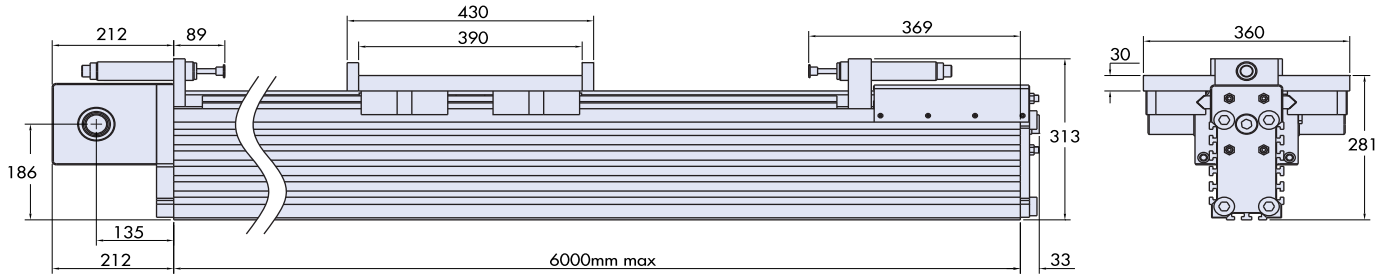

The narrow unit below is shown with the following features:

- Left hand shaft drive.
- Carriage with 64Ø bearings.
- 50mm wide belt (only option on narrow units).
- Rubber buffers.

Untenstehende Schmale Einheit ist in folgender Variante dargestellt:

- Antriebswelle linksseitig.
- Trägerplatte mit 64er Lagern.
- 50mm Zahnriemen (einzige Option für Schmale Einheit).
- Gummipuffer.

L'unité de type étroit ci-dessous a les caractéristiques suivantes:

- Sortie d'arbre à gauche.
- Chariot avec galets Ø64mm.
- Courroie de largeur 50mm (seule option pour type étroit).
- Butoirs caoutchouc.

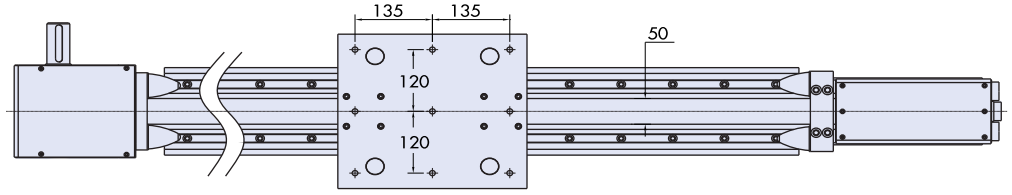

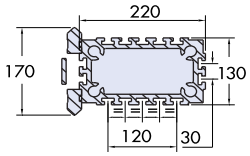

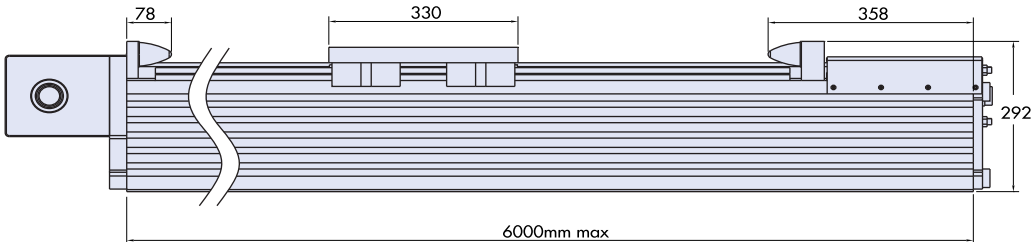

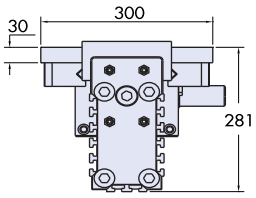

Narrow Unit Dimensions

Narrow HDLS units can be supplied with a fitted gearbox, size 5.

This gearbox may be supplied with a fitted AC motor (with optional brake), with a plug-in input flange to suit your motor, or with a free input shaft.

An extra output shaft is also an option.

Dimensions marked "C" will vary according to the duty. Please contact Hepco for details.

Maße der Schmalen Einheit

Die Schmale Einheit kann mit einem Getriebegehäuse der Größe 5 versehen werden.

Das Getriebe kann bereits einen Asynchronmotor besitzen (auch mit Motorbremse), einen Motorflansch für Ihren Antrieb oder eine einfache Antriebswelle.

Ebenso besteht die Option einer Abtriebswelle.

Die Maße "C" bestimmen sich durch die jeweilige Anwendung. Nehmen Sie bitte für nähere Details Kontakt zu HEPCO auf.

Dimensions de l'unité étroite

Les unités HDLS de type étroit peuvent être livrées avec un réducteur de taille 5. Ce réducteur peut être fourni avec un moteur asynchrone (frein en option), ou avec bride de montage adaptée à votre moteur, ou encore avec arbre nu.

Une deuxième sortie d'arbre peut être prévue en option. Les dimensions marquées "C" varieront suivant les données de l'application. Contactez Hepco pour plus de renseignements.

Gearbox with AC Motor
Getriebe mit Asynchronmotor
Réducteur avec moteur asynchrone

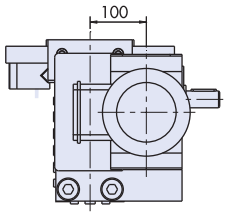

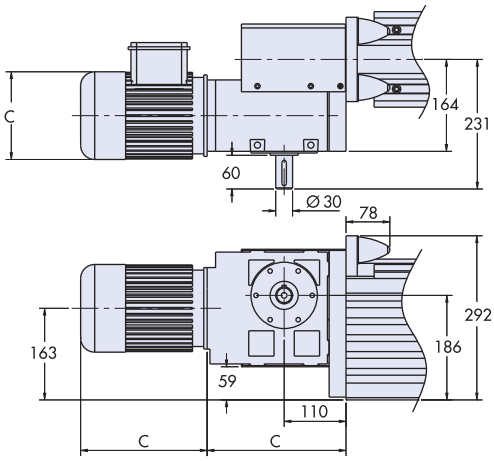

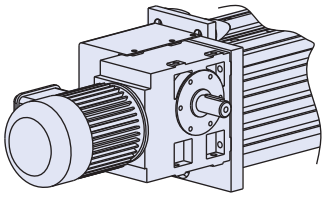

Gearbox with Plug-in Flange
Getriebe mit Motorflansch
Réducteur avec bride de montage

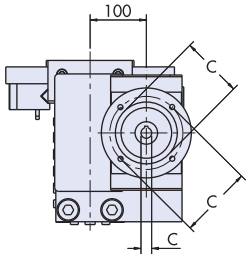

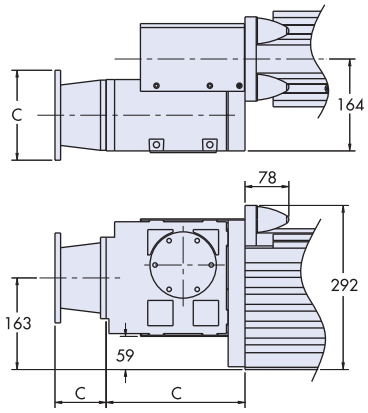

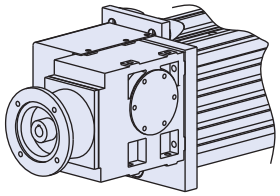

Gearbox with Free Input Shaft
Getriebe mit Antriebswelle
Réducteur avec arbre nu

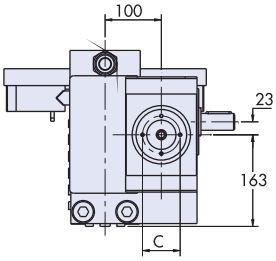

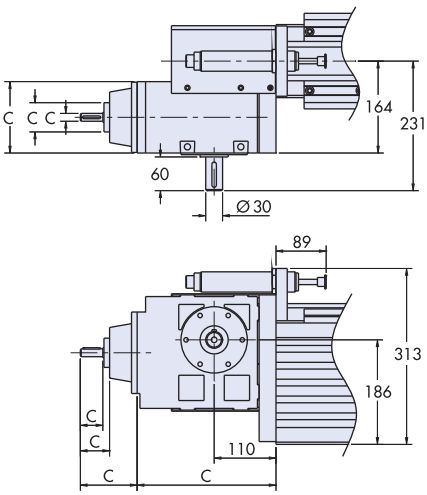

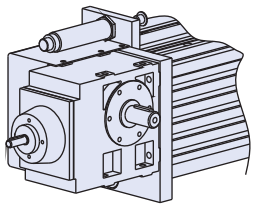

Wide Unit Dimensions

This section includes the major dimensions of the HDLS with various options to assist in initial selection.

For complete data on units of interest, contact Hepco, who will supply an accurate CAD model, which should be used for final selection and design.

Maße der Breiten Einheit

Dieser Abschnitt beschreibt die wichtigsten Maße der verschiedenen Varianten von HDLS zur Erleichterung der Vorauswahl.

Für vollständige Daten bei konkreten Anwendungen wenden Sie sich bitte an HEPCO. Wir liefern Ihnen ggf. ein genaues CAD-Modell, das Sie für Ihre Konstruktion verwenden können.

Dimensions de l'unité large

Cette section donne les dimensions principales des unités, et les différentes options, pour permettre un choix initial. Pour avoir une description complète d'une unité donnée, adressez-vous à Hepco, qui réalisera un dessin CAO complet pour aider à la définition finale de l'unité.

The wide unit below is shown with the following features:

- Left hand shaft drive.
- Carriage with 64Ø bearings.
- 75mm wide drive belt.
- Rubber buffers.

Untenstehende Breite Einheit ist in folgender Variante dargestellt:

- Antriebswelle linksseitig.
- Trägerplatte mit 64er Lagern.
- 75mm breiter Zahnriemen.
- Gummipuffer.

L'unité de type large ci-dessous a les caractéristiques suivantes:

- Sortie d'arbre à gauche.
- Chariot avec galets Ø64mm.
- Courroie de largeur 75mm.
- Butoirs caoutchouc.

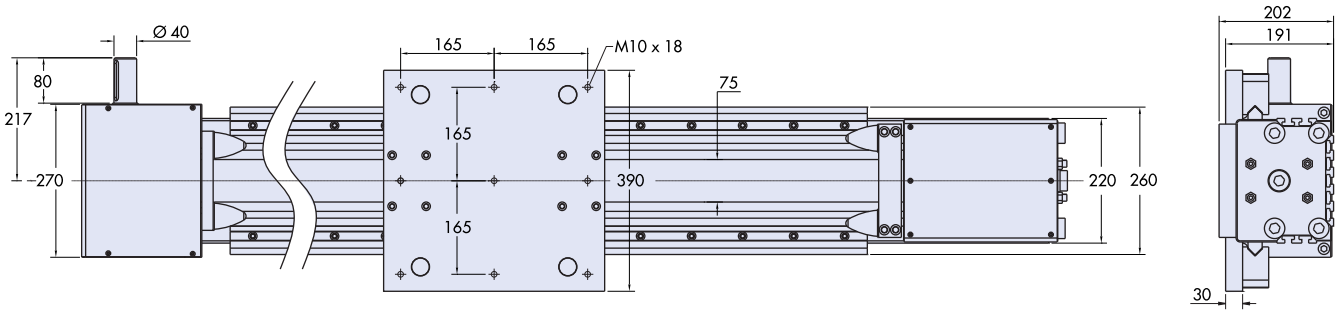

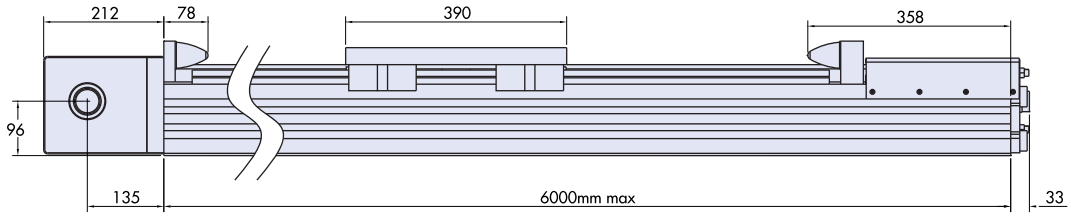

The wide unit below is shown with the following features:

- Double shaft drive.
- Carriage with 95Ø bearings.
- 50mm wide drive belt.
- Shock absorbers.

Untenstehende Breite Einheit ist in folgender Variante dargestellt:

- Antriebswelle mit Abtriebsoption.
- Trägerplatte mit 95er Lagern.
- 50mm breiter Zahnriemen.
- Stoßdämpfer.

L'unité de type large ci-dessous a les caractéristiques suivantes:

- Double sortie d'arbre.
- Chariot avec galets Ø95mm.
- Courroie de largeur 50mm.
- Amortisseurs.

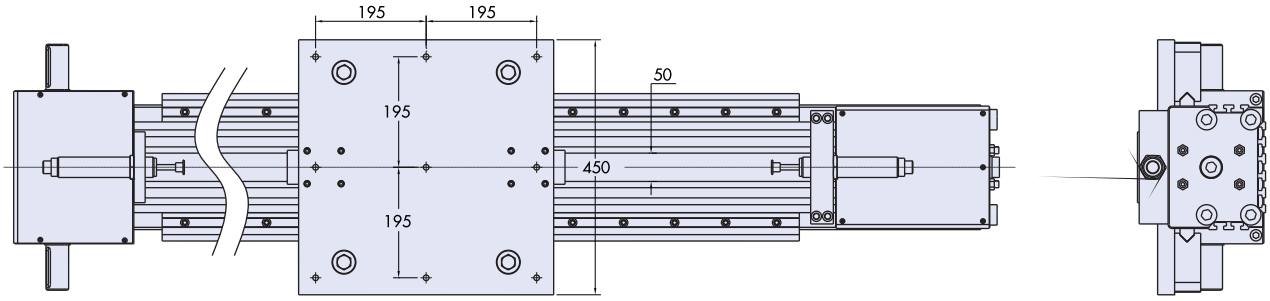

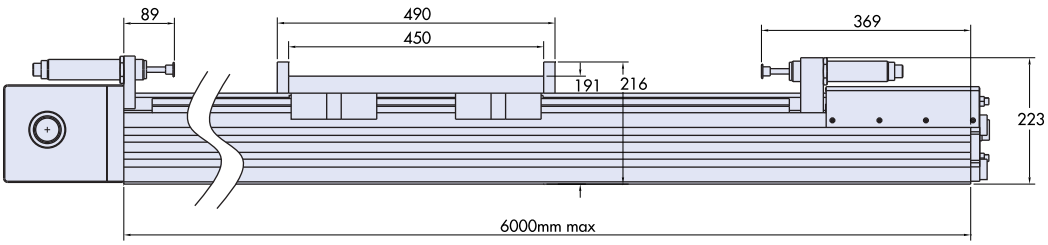

Wide Unit Dimensions

The wide type HDLS unit may be supplied with two different sizes of gearbox or geared motor, which are shown below.

The geared motor version is illustrated, but the same sizes of gearbox are also available with input flange, free input shaft and extra output shaft (as shown on page 7).

The wide unit below is shown with the following features:

- Size 5 gearbox.
- Extra output shaft.
- 50mm wide belt (standard with size 5 gearbox).
- Shock absorbers.

Dimensions "C" depend on the duty.

Die Maße "C" bestimmen sich durch die jeweilige Anwendung.

Les dimensions "C" varient suivant l'application.

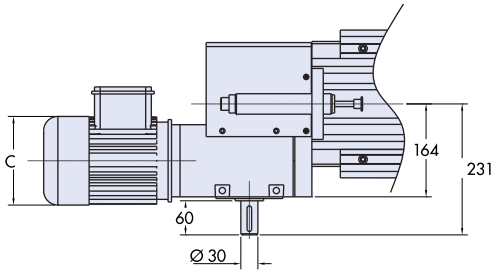

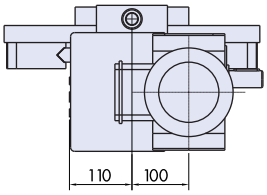

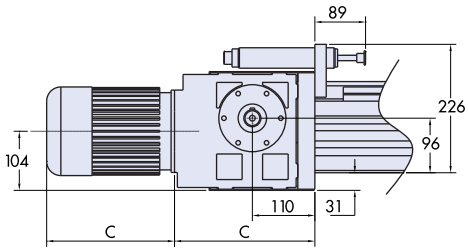

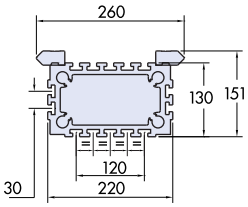

The wide unit shown below has the following features:

- Size 6 gearbox.
- Extra output shaft.
- 75mm wide belt (standard with size 6 gearbox).
- Rubber buffers.

Note that the shock absorber option on this size differs from other versions and requires a longer beam. Contact Hepco for details.

Dimensions "C" depend on the duty.

Die Maße "C" bestimmen sich durch die jeweilige Anwendung.

Les dimensions "C" varient suivant l'application.

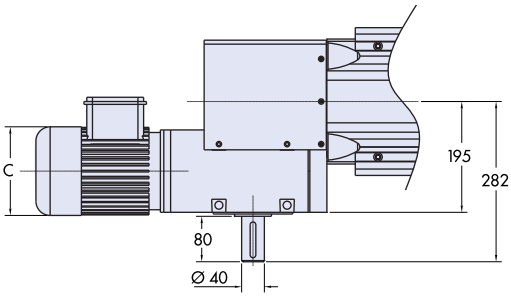

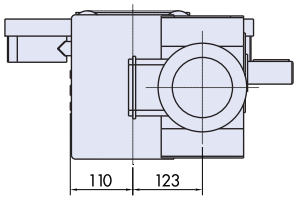

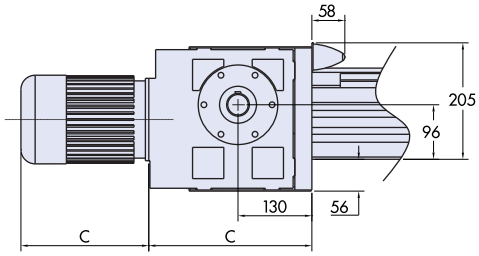

Maße der Breiten Einheit

Die Breite Einheit kann mit zwei verschiedenen Getriebe- oder Getriebemotorgrößen versehen werden, wie unten dargestellt.

Dargestellt ist die Version mit Getriebemotor, allerdings sind reine Getriebe in gleicher Größe ebenso erhältlich, sei es mit Motorflansch, einfacher Antriebs- oder auch zusätzlicher Antriebswelle (wie auf S.7 beschrieben).

Untenstehende Breite Einheit ist in folgender Variante dargestellt:

- Getriebegehäuse der Größe 5.
- Abtriebswelle.
- 50mm breiter Zahnriemen (Standard bei Getriebegröße 5).
- Stoßdämpfer.

Untenstehende Breite Einheit ist in folgender Variante dargestellt:

- Getriebegehäuse der Größe 6.
- Abtriebswelle.
- 75mm breiter Zahnriemen (Standard bei Getriebegröße 6).
- Gummipuffer.

Bitte beachten Sie, dass beim Einsatz von Stoßdämpfern ein längeres Profil benötigt wird. Kontaktieren Sie Hepco für Details.

Dimensions de l'unité large

Les unité HDLS de type large peuvent être fournies avec deux tailles différentes de réducteur ou motoréducteur, illustrées ci-dessous.

Moteur et réducteur sont représentés, mais les mêmes tailles de réducteur sont aussi disponibles avec bride de montage, ou arbre nu, ou avec double sortie d'arbre (voir page 7).

L'unité de type large ci-dessous a les caractéristiques suivantes:

- Réducteur de taille 6.
- Double sortie d'arbre.
- Courroie de largeur 50mm (standard pour réducteur de taille 5).
- Amortisseurs.

L'unité de type large ci-dessous a les caractéristiques suivantes:

- Réducteur de taille 6.
- Double sortie d'arbre.
- Courroie de largeur 75mm (standard avec réducteur de taille 6).
- Butoirs caoutchouc.

Veuillez noter que l'option amortisseurs est différente pour ce modèle, et nécessite une poutre plus longue. Consultez Hepco pour plus de renseignements.

Technical Specifications

Technische Daten

Données techniques

Carriage Load Capacity

The table below shows the maximum loading for each carriage in each possible loading mode. It also includes the loads for 10000km travel.

This table is intended as a guide for initial selection only. Please send application details to Hepco, and we will calculate the system Load/Life for you.

Tragfähigkeiten

Die Tabelle zeigt die Maximallasten aller Varianten in jeder Richtung. Zudem ist die Grenzlast für eine Lebensdauer von 10.000km angegeben.

Die Werte sind nur Richtlinie für die Vorauswahl. Senden Sie bitte die Details Ihrer Anwendung an HEPCO, damit wir die Lebensdauer Ihres System bestimmen.

Capacité de charge du chariot

Le tableau ci-dessous donne l'effort maximum pour chaque type de chariot suivant la direction de l'effort, et l'effort correspondant à 10000km de durée de vie.

Ce tableau n'est qu'une aide pour le choix initial. Transmettez les données de votre application à Hepco, qui fera le calcul de la durée de vie.

Carriage* Wagen* Chariot*	L1	L2	Ms	Mv	M
HDLS-64N	max 10000N @300km	max 16000N @500km	max 610Nm @ 300km	max 1600Nm @500km	max 1000Nm @ 300km
	3100N @ 10000km	5895N @10000km	190Nm @ 10000km	590Nm @10000km	311Nm @ 10000km
HDLS-64W	max 10000N @300km	max 16000N @500km	max 1060Nm @300km	max 2080Nm @500km	max 1300Nm @300km
	3100N @ 10000km	5895N @10000km	329Nm @10000km	766Nm @10000km	404Nm @10000km
HDLS-95N	max 28000N @400km	max 40000N @ 400km	max 1708Nm @400km	max 4600Nm @ 400km	max 3220Nm @400km
	9570N @10000km	13680N @ 10000km	584Nm @10000km	1573Nm @ 10000km	1101Nm @10000km
HDLS-95W	max 28000N @400km	max 40000N @ 400km	max 2968Nm @ 400km	max 5800Nm @ 400km	max 4060Nm @ 400km
	9570N @10000km	13680N @ 10000km	1015Nm @10000km	1984Nm @ 10000km	1389Nm @10000km

Data for Drive Calculations

The table below includes the parameters necessary to calculate the performance and duty of an HDLS mechanical system (without gearbox).

Hepco will do the required calculations for you, or they may be found in the Hepco DLS catalogue.

Daten zur Auslegung

Nachstehende Tabelle zeigt die notwendigen Werte für die Auslegung der Mechanik einer HDLS (ohne Getriebe).

HEPCO liefert die komplette Auslegung, sofern die Daten nicht dem DLS-Katalog entnommen werden können.

Calcul de l'entraînement

Le tableau ci-dessous donne les paramètres nécessaires pour le calcul des performances et des capacités d'un ensemble mécanique HDLS (réducteur non compris).

Hepco vous propose de faire les calculs pour vous. La méthode de calcul est aussi donnée dans le catalogue DLS.

HDLS Parameter	HDLS Parameter	HDLS Paramètre			
mass of carriage HDLS-N-64*	Wagengewicht HDLS-N-64*	masse du chariot HDLS-N-64*	Mc	(kg)	12
mass of carriage HDLS-W-64*	Wagengewicht HDLS-W-64*	masse du chariot HDLS-W-64*	Mc	(kg)	17
mass of carriage HDLS-N-95*	Wagengewicht HDLS-N-95*	masse du chariot HDLS-N-95*	Mc	(kg)	20
mass of carriage HDLS-W-95*	Wagengewicht HDLS-W-95*	masse du chariot HDLS-W-95*	Mc	(kg)	26
mass of 50 belt wide	Riemengewicht 50mm	masse de la courroie de 50mm	Mb	(kg/m)	0.5
mass of 75 belt wide	Riemengewicht 75mm	masse de la courroie de 75mm	Mb	(kg/m)	0.75
pulley radius	Umlenkrollenradius	rayon de la poulie	r	(cm)	6.37
drive efficiency	Wirkungsgrad	rendement de la transmission	hd	(-)	0.9
break away friction	Anfahrwiderstand	frottement au démarrage	Fba	(N)	90
coefficent of friction	Reibungskoeffizient	coefficient de frottement	m	(-)	0.03
moment of inertia of 50 wide pulley	Massenträgheit Umlenkrolle (50mm)	moment d'inertie poulie de 50	Ip	$(kgcm)^2$	43
moment of inertia of 75 wide pulley	Massenträgheit Umlenkrolle (75mm)	moment d'inertie poulie de 75	Ip	$(kgcm)^2$	60
max linear force (50 wide belt)	max. Linearkraft (50mm)	traction maxi (courroie de 50)	Fmax	(N)	4900
max linear force (75 wide belt)	max. Linearkraft (75mm)	traction maxi (courroie de 75)	Fmax	(N)	7350
linear move per shaft rev	Linearweg je Wellenumdrehung	avance linéaire par tour d'arbre		(m)	0.4
moment of inertia of beam	Trägheitsmoment des Profils	moment d'inertie du corps	Ix-x	$(mm)^4$	4.7×10^7
moment of inertia of beam	Trägheitsmoment des Profils	moment d'inertie du corps	Iy-y	$(mm)^4$	1.8×10^7
Shock absorber impact energy	Energieaufnahme des Stoßdämpfers	énergie absorbée - amortisseur		J /impact	282
Buffer impact energy	Energieaufnahme des Gummipuffers	énergie absorbée - butoir		J /impact	37

* See page 13 for explanation for part number *Vgl.S.13 für Bestellnummern *voir explication des références page 13

HDLS with Gearboxes

Speeds & Forces

HDLS units can drive at speeds in excess of 6m/s if coupled to a suitable drive.

Units with a fitted gearbox or AC geared motor will operate from zero to speeds in excess of 2.5m/s.

The driving force which can be generated by an HDLS unit with fitted gearbox or geared motor will depend on the size and ratio of the gearbox, the operating speed, and the safety factor required by the application.

HDLS mit Getriebe

Geschwindigkeit und Kräfte

Geeignete Antriebe lassen HDLS-Einheiten Lineargeschwindigkeiten über 6 m/s erreichen.

Integrierte Getriebe oder Asynchronmotoren lassen Geschwindigkeiten von 2,5 m/s und mehr zu.

Die Linearkraft einer HDLS mit Getriebe oder Asynchronmotor hängt von Getriebegröße und -übersetzung ebenso ab wie von Lineargeschwindigkeit und erforderlichem Sicherheitsfaktor der Anwendung.

HDLS avec réducteur

Vitesses et forces

Les unités HDLS peuvent atteindre des vitesses supérieures à 6m/s, si la motorisation le permet.

Les unités livrées avec réducteur ou motoréducteur peuvent fonctionner de zéro à plus de 2,5m/s.

La force d'entraînement délivrée par une unité HDLS avec réducteur dépend de la taille et du rapport du réducteur, de la vitesse de fonctionnement, et du coefficient de sécurité demandé par l'application.

Gearbox Getriebegröße Réducteur	Belt Zahnriemen Courroie	Typical driving force* Typische Antriebskraft* Force d'entraînement moyenne*
HW5 & HB5	AT20 x 50 mm	3600 N
HW6 & GB6	AT20 x 75 mm	5000 N
Larger gearboxes and belts available on request Größere Getriebe und Zahnriemen sind auf Anfrage erhältlich. Des réducteurs et courroies de plus forte capacité sont disponibles sur demande		

* Actual driving force is dependant on a number of factors and will be advised by Hepco once details of the duty are submitted.

* Die tatsächliche Antriebskraft hängt von vielen Faktoren ab. Sie wird von HEPCO ermittelt, sofern die Details der Anwendung vorliegen.

* La force d'entraînement réelle dépend de plusieurs paramètres, et sera définie par Hepco en fonction des données de l'application

Beam Deflection

The deflection of HDLS beams under load is the same as for Hepco Heavy Duty beam systems, and calculations are covered in detail in the Heavy Duty Slide System catalogue. Hepco will be happy to calculate deflections for you.

HDLS - Vorteile

Das HDLS-Profil verhält sich unter Lasteinfluss wie das Profil aus HEPCOs Hochleistungssystem. Details zur Berechnung finden sich im entsprechenden Katalog. HEPCO nimmt diese Berechnung gerne für Sie vor.

Flexion du corps

La flexion du corps d'une unité HDLS sous un effort est identique à celle d'une poutre de la gamme fortes charges, dont le catalogue donne tous les éléments de ce calcul. Hepco fera, si vous le souhaitez, le calcul de la flexion pour votre application

Beam Deflection Examples

Beispiele zur Profilverformung

Exemples de flexion du corps

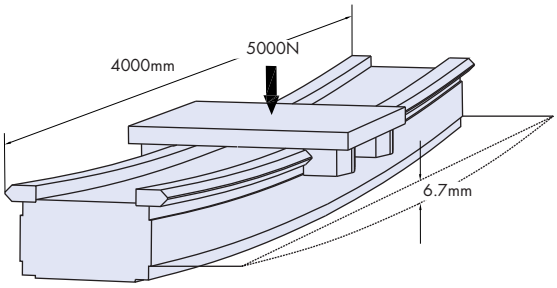

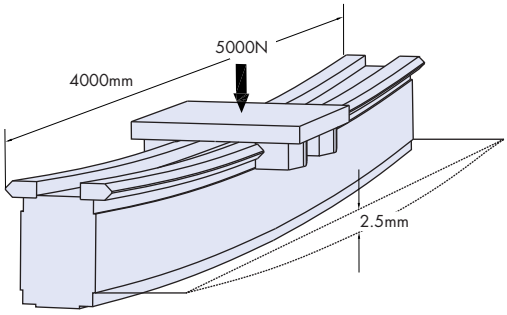

Ancillary Components

Zubehörteile

Accessoires

The following components will be of use in HDLS applications.

When ordering, simply list the quantity and part number required.

Folgende Komponenten erleichtern die Verwendung der HDLS.

Zum Bestellen einfach Anzahl und Teile-Nr. angeben.

Les composants suivants complètent les unités HDLS.

Pour les commander, indiquer seulement la quantité et la référence voulues.

Fixing Brackets

Befestigungswinkel

Equerres de fixation

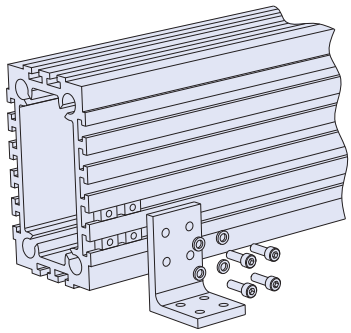

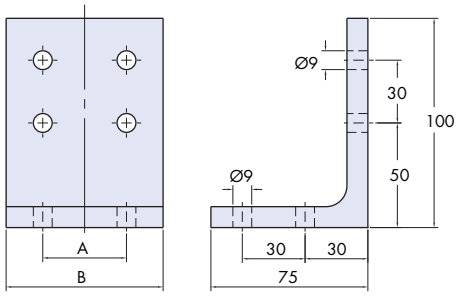

Part number Bestell-Nr. Référence	A	B
HBLB-30	30	60
HBLB-40	40	75
HBLB-45	45	75

Material = steel
Finish = zinc plate passivated
Material = Stahl
Oberfläche = verzinkt
Matière : acier
finition : zingage passivé

Limit Switching

Endschalter

Capteurs

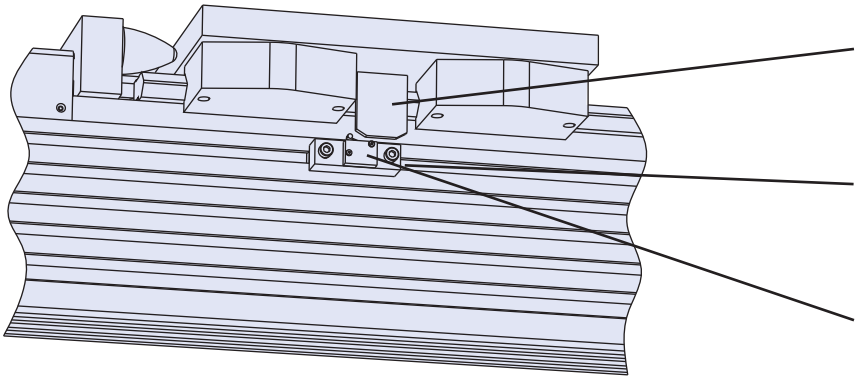

Switch cam: Part number = HDLS-SWC
Schaltfahne: Bestell-Nr. = HDLS-SWC
Came - référence HDLS-SWC

Switch bracket: Part number = HDLS-SWB
Schalterklemme: Bestell-Nr. = HDLS-SWB
Support de capteur - référence HDLS-SWB

Microswitch: Part number = DLS-V7SW-M/I
Mikroschalter: Bestell-Nr. = DLS-V7SW-M/I
Capteur - référence DLS-V7SW-M/I

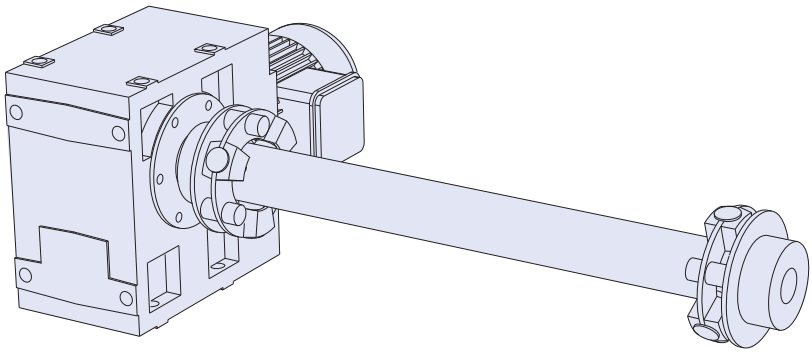

Drive Shafts

Drive shafts in a number of sizes and designs are available. Contact Hepco for details.

Verbindungswelle

Verbindungswellen sind in verschiedener Größe und Ausführung erhältlich, fragen Sie ggf. HEPCO.

Arbres de transmission

Plusieurs tailles et modèles d'arbre sont disponibles. Renseignements complets sur demande.

Beam Accessories

Profilzubehör

Accessoires pour corps

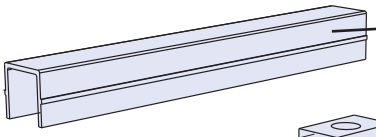

T-slot cover: part number = TC12-123 (123 is length in mm)
T-Nut-Abdeckung: Bestell-Nr. = TC12-123 (123: Länge in mm)
Cache rainure - référence TC12-123 (123 = longueur en mm)

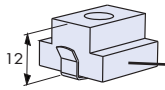

M8 T-nut with retaining spring
T-Nutenstein mit Klemmfeder
Ecrou en T avec ressort de maintien

Part No. Bestell-Nr. référence	Thread Gewinde Taraudage
HTNM6	M6
HTN25	M8
HTNM10	M10

How to order

The ordering information below is given in order to assist communication, but you are recommended to discuss your application with Hepco first so that we can help to specify the best unit to suit your needs.

A step-by-step HDLS enquiry form is available at our website www.HepcoMotion.com to help in selection.

Bestellhinweise

Nachstehende Information soll die Bestellung vereinfachen. Sie sind jedoch herzlich eingeladen, Ihre Anwendung zunächst mit HEPCO zu besprechen, um so die beste Lösung für Ihre Anwendung zu finden.

Auf HEPCOs Website www.HepcoMotion.com finden Sie auch ein Formular zur Auswahlhilfe in mehreren Schritten.

Pour commander

La codification ci-dessous a pour but de donner une formulation logique de la commande; il est toutefois recommandé de consulter tout d'abord Hepco sur votre application, afin de définir au mieux l'unité adaptée à votre besoin.

Un questionnaire est disponible sur notre site internet (www.HepcoMotion.com) pour faciliter cette sélection.

Main Unit / Grundeinheit / Unité linéaire

HDLS N 95 P1 L3648 B50 SH GB

HDLS = product range.
HDLS = Produktbezeichnung
HDLS = nom du produit.

N = narrow unit, **W** = wide unit and **A** = angled unit (see page 4).
N = Schmale Einheit, **W** = Breite Einheit, **A** = Winkeleinheit (vgl. S.4).
N type étroit, **W** =type large, **A** =type latéral. (voir page 4).

Bearing size: choose either **64** or **95** depending on load capacity.
Lagergröße: Wählen Sie zwischen **64** und **95** in Abhängigkeit der Tragfähigkeit.
Taille des galets : choisir **64** ou **95** suivant la capacité nécessaire.

P1 = units have precision ground slides, **P3** = units have commercial slides.
P1 = geschliffene Führungsschienen, **P3** = ungeschliffene Führungsschienen.
P1 = rails rectifiés, **P3** =rails de qualité courante.

3648 = beam length in mm (see pages 6 & 8). Up to 6000 in one piece, longer on request.
3648 = Profillänge in mm (vgl. S. 6 & 8). Bis 6.000mm einteilig, darüber auf Anfrage
3648 = longueur du corps en mm (voir pages 6 & 8). En une pièce jusqu'à 6m, et plus sur demande.

Belt width: (AT20 profile). Choose **50** or **75**mm for wide, **50**mm for narrow & angled units.
Riemenbreite (AT20-Profil). Wählen Sie **50** oder **75**mm für die Breite, **50**mm für Schmale und Winkeleinheit
Largeur de courroie (type AT20). Choisir **50** ou **75** pour type large, **50** pour type étroit ou latéral.

End of stroke protection: **SH** = shock absorbers, **BU** = rubber buffers.
Endanschlag: **SH** = Stoßdämpfer, **BU** = Gummipuffer
Protection de fin de course: **SH** = amortisseurs, **BU** = butoirs caoutchouc.

RS = right handed drive shaft, **LS** = left handed drive shaft, & **DS** = double drive shaft.
If a gearbox is to be fitted (instead of a drive shaft), insert the letters **GB** and complete gearbox part number below.
RS = Antriebswelle rechts, **LS** = Antriebswelle links, **DS** = Antriebs- und Abtriebswelle
Für ein Getriebe statt Antriebswelle geben Sie bitte **GB** an und bestellen das Getriebe wie unten aufgeführt
RS = arbre à droite, **LS** = arbre à gauche, et **DS** = double sortie d'arbre.
Si un réducteur est nécessaire (au lieu d'une sortie d'arbre), inscrire **GB** suivi de la référence du réducteur ci-dessous.

Gearbox/geared motor / Getriebe / Getriebemotor / Réducteur/motoréducteur

HW 5 S R9.412 M 80 L 4 B

HW = helical-worm gearbox, **HB** = helical-bevel gearbox.
HW = Schneckengetriebe, **HB** = Kegelradgetriebe
HW = roue et vis - **HB** = spiro-conique.

Gearbox size: The options are: wide units sizes **5** & **6**, narrow & angled units size **5** only.
Getriebegröße: Für die Breite Einheit Größe **5** und **6**, für Schmale und Winkeleinheit nur Größe **5**
taille du réducteur - options : tailles **5** et **6** pour type large, taille **5** seule pour types étroit et latéral.

S = output shaft is provided, **O** = no output shaft.
S = mit Abtriebswelle, **O** = ohne Abtriebswelle
S = sortie d'arbre - **O** = pas de sortie d'arbre.

The reduction ratio of the gearbox. Contact Hepco for alternatives.
Untersetzungsverhältnis des Getriebes. Fragen Sie HEPCO nach Alternativen
Rapport de réduction du réducteur - demandez options à Hepco.

M = fitted AC motor, **F** = input flange and **S** = free input shaft.
M = Asynchronmotor, **F** = Motorflansch, **S** = einfache Antriebswelle.
M = motoréducteur asynchrone monté - **F** = bride de montage - **S** = arbre nu.

Frame size of AC motor or input flange.
Rahmengröße des Motors oder Flansches.
Taille du moteur ou de la bride de montage.

AC motor field length: choose L (long) or S (short).
Wicklungsbreite des Motors: L (lang) oder S (kurz).
Longueur de champ du moteur : choisir L (long) ou S (court).

Motor poles: **2** pole motor (turns @ 2800rpm for 50Hz~) or **4** pole motor (turns @1400rpm for 50Hz~). Other options available.
Polzahl des Motors: 2 (2800 min-1 bei 50Hz) oder 4 (1400 min-1 bei 50Hz). Weitere Optionen erhältlich.
Pôles du moteur - **2** pôles (2800t/min à 50 Hz) ou **4** pôles (1400t/min à 50Hz). Autres options disponibles.

Brake motor. **B** is added if a holding brake is required on the AC motor.
Motorbremse: **B** für Asynchronmotor mit Bremsmodul.
Moteur frein - ajouter **B** si un frein est nécessaire sur le moteur

HepcoMotion® Product Range/Produktreihe/gamme de produits


GV3


HDS2

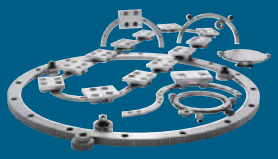
PRT2


HDRT


SL2


LBG

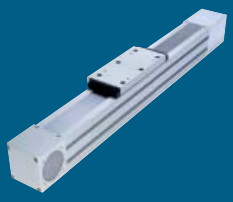
SBD

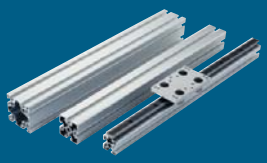
MCS


HDLS


DLS

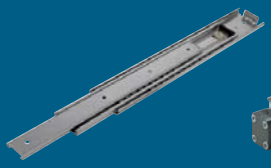
HTS


HPS


MHD

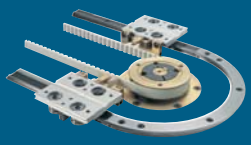
DTS


BSP

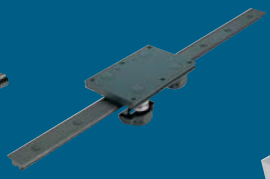
Simple Select®

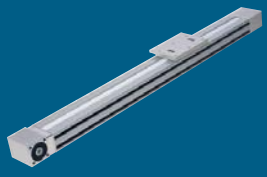
PDU2

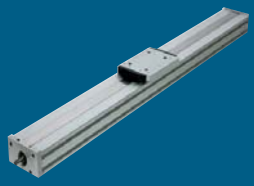
PSD120

Bishop-Wisecarver Product Range/Produktreihe/gamme de produits

HepcoMotion® – Exclusive European partners and distributors for Bishop-Wisecarver since 1984.

HepcoMotion® – exclusiver europäischer Partner und Händler für Bishop-Wisecarver seit 1984.

HepcoMotion® – partenaire et distributeur européen exclusif de Bishop-Wisecarver depuis 1984.

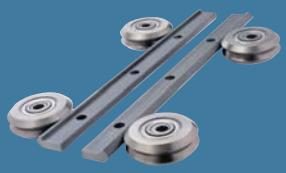
DualVee®

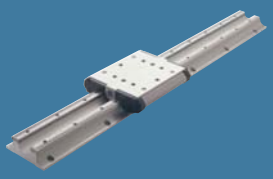
LoPro®

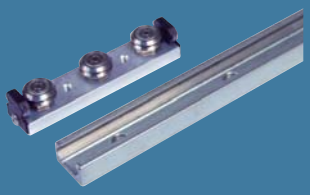
UtiliTrak®

HepcoMotion®

www.HepcoMotion.com

HepcoMotion® – Deutschland
Feucht, Deutschland
Tel: (0049) (0) 9128 92710
Fax: (0049) (0) 9128 927150
E-mail: info.de@hepcomotion.com

HepcoMotion® – Head Office
Lower Moor Business Park, Tiverton Way
Tiverton, Devon, England EX16 6TG
Tel: (0044) (0) 1884 257000
Fax: (0044) (0) 1884 243500
E-mail: sales@hepcomotion.com

HepcoMotion® – France
Cergy Pontoise Cédex, France
Tel: (0033) (0) 1 34 64 30 44
Fax: (0033) (0) 1 34 64 33 88
E-mail: info.fr@hepcomotion.com

ISO 9001 BUREAU VERITAS Certification UKAS

This data sheet interacts with
HDS2 Catalogue
7

HepcoMotion®

No. 1 HDCS Heavy Duty Compact Ballscrew Transmission

The HDCS unit uses the strong and compact HB25C construction beam. The concave top face of the beam accommodates the ballscrew, minimising system height. This unit can be used as a stand alone horizontal axis, or a vertical axis with either the carriage or the beam as the moving element. Grippers can be attached to the end plate.

The slides fitted are the Heavy Duty single edge type with either 64mm or 95mm dia bearings depending upon capacity requirements. Slide lubrication is provided by low maintenance cap wipers with a relubrication point provided for the ballscrew. The fitted ballscrew is 25mm diameter, with either a 5mm or 10mm pitch. The whole unit can be provided with a bellows cover if necessary.

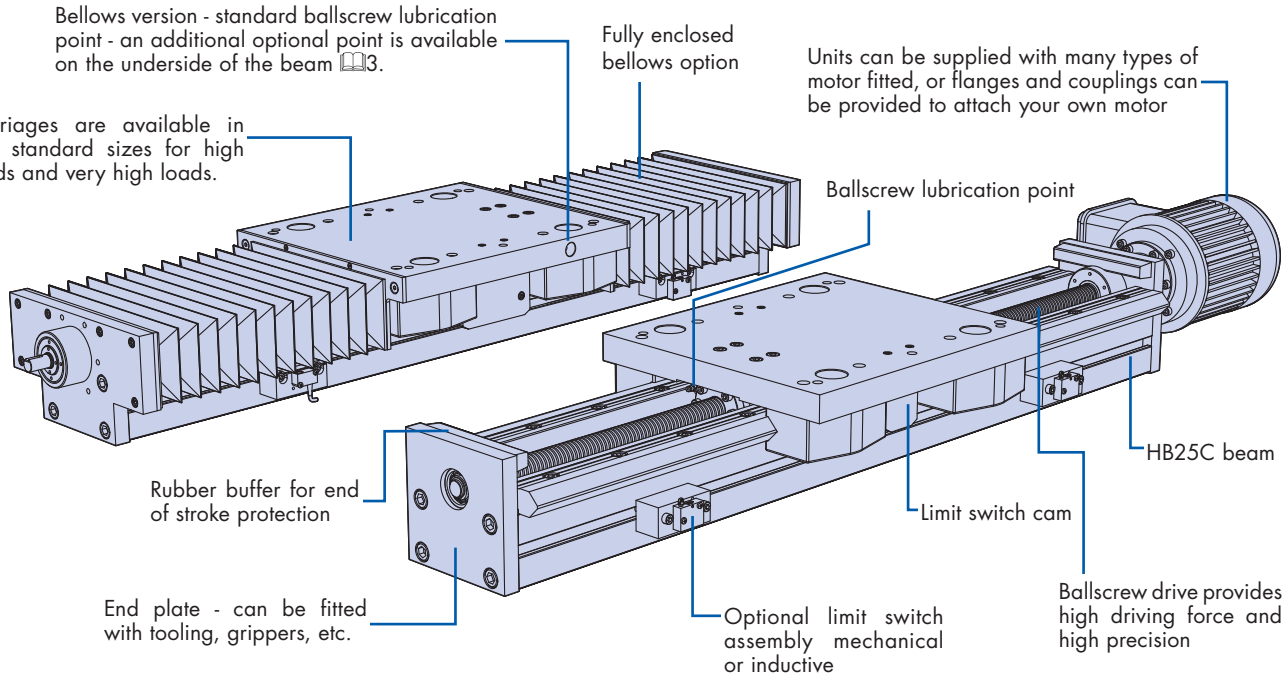

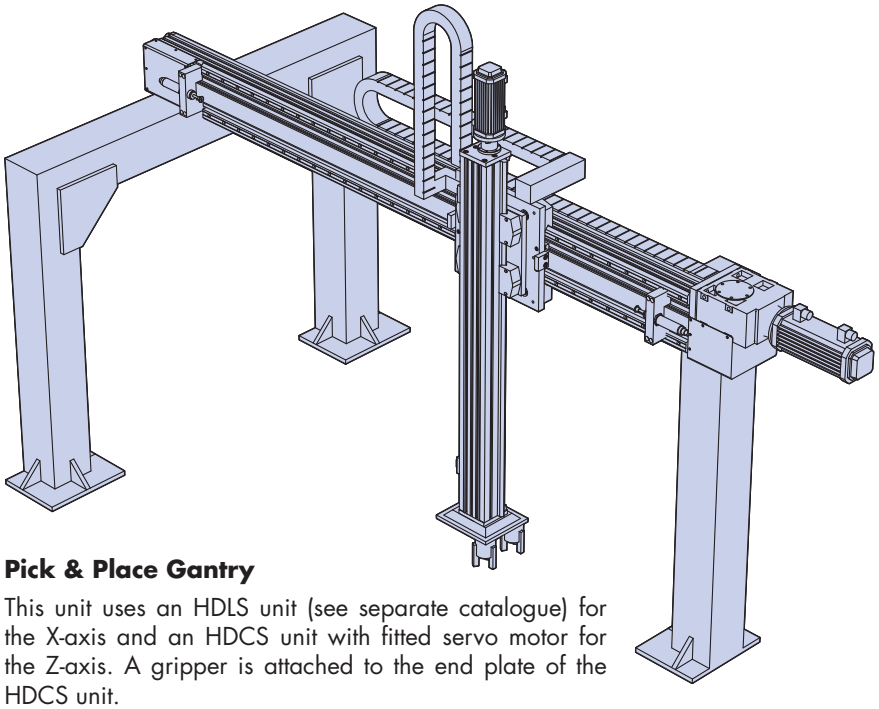

- Compact high strength aluminium beam section.
- Lengths up to 2900mm as standard.
- Optional bellows covered version.
- High capacity 64mm or 95mm dia bearings provide good rigidity under load.
- Beam T-slots compatible with HDS section for ease of mounting

Pick & Place Gantry

This unit uses an HDLS unit (see separate catalogue) for the X-axis and an HDCS unit with fitted servo motor for the Z-axis. A gripper is attached to the end plate of the HDCS unit.

Data and Dimensions

The Hepco HDCS unit is built using the strong yet compact HB25C construction beam, and fitted with single edge V slides, HSS25. Two sizes of carriage are available using the Ø64 V bearing for heavy loads and the larger capacity Ø95 V bearing for very heavy loads. Drive is provided by a Ø25mm ballscrew, with a choice of 5mm or 10mm pitch. HDCS units are available with a bellows cover as a standard option, these will provide a high level of protection from dirt & debris. Belt driven systems are also available see the HDLS Heavy Duty linear transmission system catalogue for details.

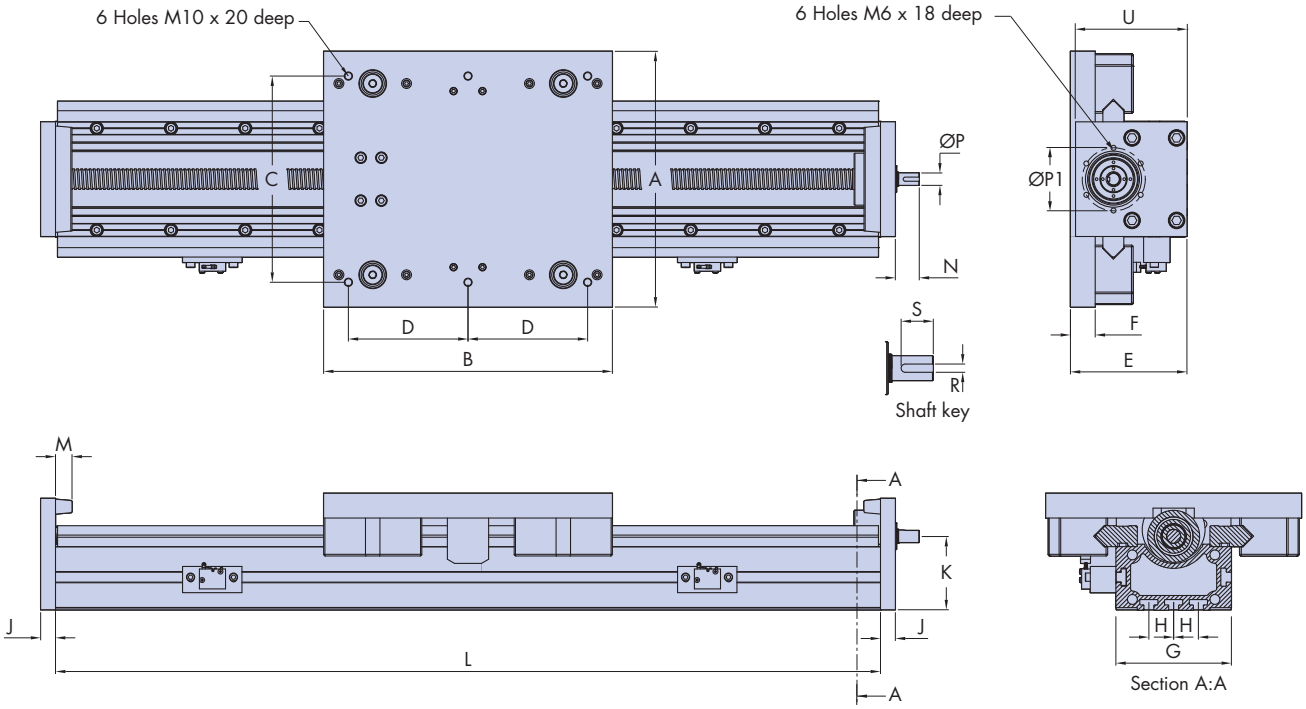

Part Number	A	B*2	C	D	E*3	F	G	H	J	K	L*1	M	N	N1
HDCS 64	310	350	250	145	141.5	30	140	30	18	89.5	up to 2930	20	29	-
HDCS B 64	310	360	250	145	141.5	30	140	30	18	89.5	up to 2900	-	29	61
HDCS 95	375	430	315	185	141.5	30	140	30	18	89.5	up to 2930	20	29	-
HDCS B 95	375	440	315	185	141.5	30	140	30	18	89.5	up to 2900	-	29	61

Standard unit - Nominal stroke length is calculated with the carriage positioned against the buffer. In practice a clearance between the carriage and the buffers should be provided at either end of the stroke to allow for overrun.
Beam length (L) = Stroke length + carriage length (B) + 40.

Performance

The maximum linear speed of the HDCS unit is determined by the critical speed of the ballscrew and pitch size. The linear speed for different ballscrew pitches and the maximum rotational speed of the ballscrew are shown in the graphs below.

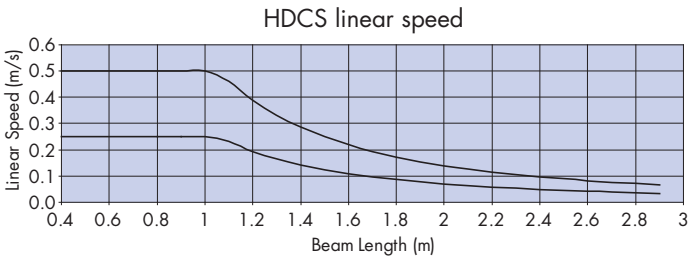

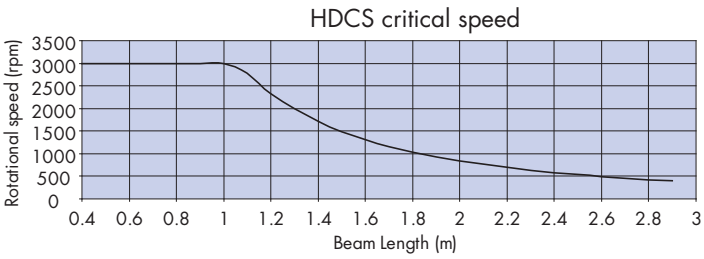

Notes:

1. Beam lengths up to figure stated are available rapid delivery, beam length up to 5900mm are possible - contact Hepco for details.
2. Dimension 'B' for bellows version HDCS 64/95 B are 10mm longer than the standard version due to additional plates for mounting the bellows, actual carriage plate lengths are the same for both versions.
3. Dimension 'E' in the table is stated for slide grade P1, for P3 grade slide dimension 'E' = 141.7mm.

Data and Dimensions

The HDCS unit with bellows option offers protection against the ingress of dirt and debris. The end plates of the unit have been extended and the drive end bearing has been moved out board of the unit to accommodate the bellows. This results in slightly different dimensions compared to the standard version. When specifying beam length, care should be taken to allow for the closed length of the bellows, see the note below. Bellows are manufactured from Polyester 4528, with other material options available on request. The ballscrew lubrication point is located on the side of the carriage, an additional "beam lubrication point" where the ballscrew nut is accessible through the beam is available on request.

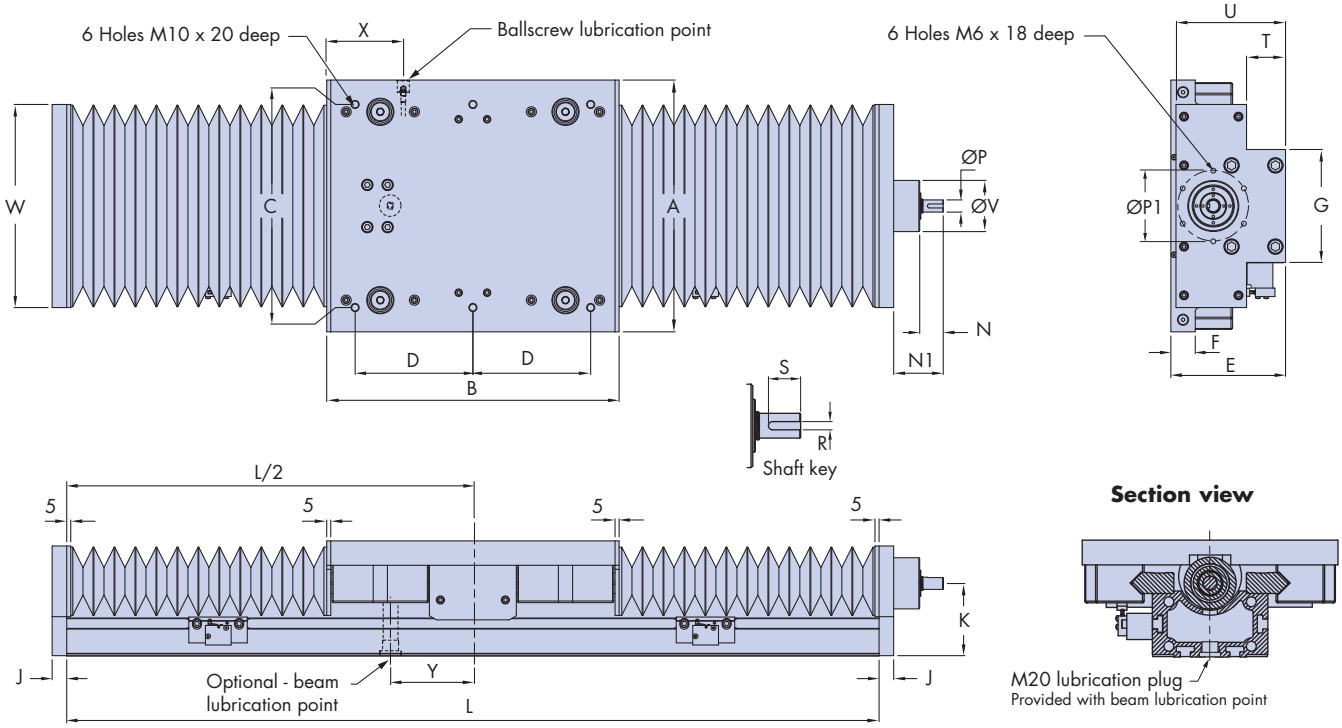

	ØP h7	ØP1	R	S	T	U	ØV h6	W	5mm Pitch X	5mm Pitch Y	10mm Pitch X	10mm Pitch Y	Maximum Driving Force kN 5mm Pitch C_a	5mm Pitch Co_a	10mm Pitch C_a	10mm Pitch Co_a
	15	76	5	19.5	-	135.5	-	-	-	-	-	-	12.8	31.1	19.4	38.7
	15	87	5	19.5	48.5	135.5	63	250	93	103	93	71	12.8	31.1	19.4	38.7
	15	76	5	19.5	-	135.5	-	-	-	-	-	-	12.8	31.1	19.4	38.7
	15	87	5	19.5	48.5	135.5	63	250	110	143	110	111	12.8	31.1	19.4	38.7

Bellows unit - Rubber buffers are not fitted to the bellows version unit, as the fitted bellows will perform the same duty. Nominal stroke length is calculated with the carriage positioned against the closed bellows. In practice a clearance between the carriage and the bellows should be provided at either end of the stroke to allow for overrun. When calculating the overall beam length the following formula should be used. Beam length (L) = Stroke length x 1.22 + carriage length (B) + 10.

For applications with critical beam length requirements please contact Hepco.

Load Capacities

The table below shows the maximum loading for each carriage in each possible loading mode. It also includes loads for 10,000km travel. This table is intended as a guide for initial selection only. Please send your application details to Hepco and we will calculate the system load/life for you.

HDCS Type	L1	L2	Ms	Mv	M
HDCS 64	max 10 000N @ 500km	max 16 000N @ 500km	max 900Nm @ 500km	max 1800Nm @ 500km	max 1125Nm @ 500km
	2820N @ 10 000km	5470N @ 10 000km	308Nm @ 10 000km	615Nm @ 10 000km	384Nm @ 10 000km
HDCS 95	max 28 000N @ 400km	max 40 000N @ 400km	max 2510Nm @ 400km	max 5400Nm @ 400km	max 3780Nm @ 400km
	8810N @ 10 000km	12 580N @ 10 000km	790Nm @ 10 000km	1700Nm @ 10 000km	1190Nm @ 10 000km

No. 1 HDCS Heavy Duty Compact Ballscrew Transmission

The HepcoMotion HDCS unit can be supplied with a fitted motor to suit many applications. Connection to other motors and gearboxes is quick and simple using one of the fixing kits. Standard kits to suit a range of motor faces including IEC C80, C90, C105, C120 and NEMA 23 and 34 are stock items. Hepco can offer a fast service on special connection kits for attachment of customer's motors and gearboxes.

The fitted motor is a cost effective option, capable of high speeds and thrusts. Hepco can supply AC motors, steppers and servo systems including optional holding brakes, encoders for positioning and inverter drives for power and control.

Please contact Hepco for full details and application advice.

Motor Connection kit

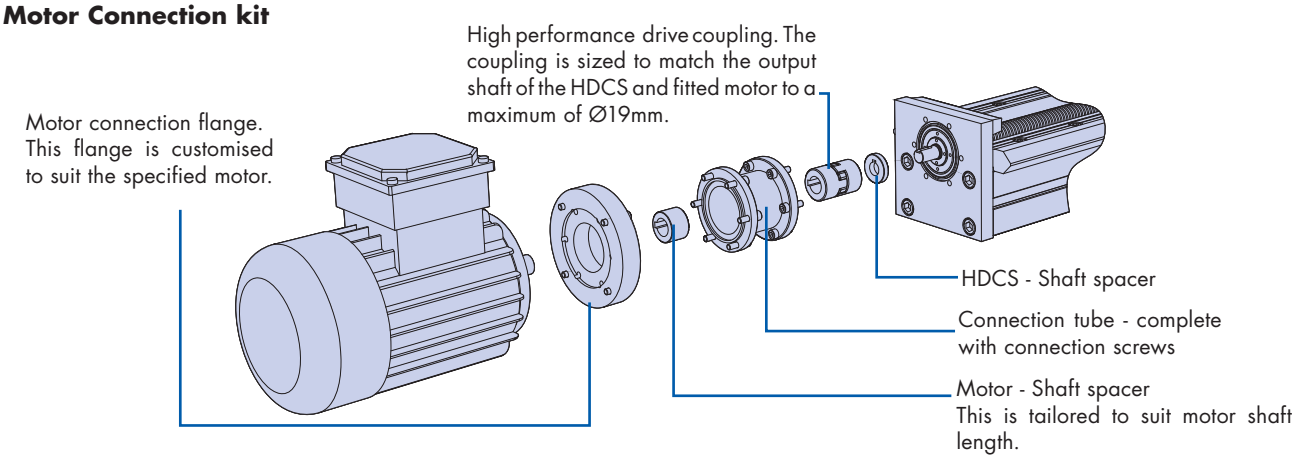

Limit switch options

Standard HDCS limit switch assembly

Mechanical switch

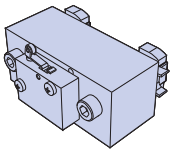

HDCS V3SWA M

Inductive switch

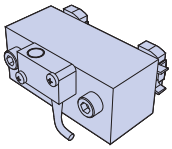

HDCS V3SWA I

HDCS bellows version limit switch assembly

Mechanical switch

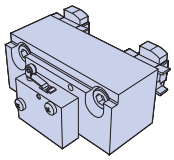

HDCS B V3SWA M

Inductive switch

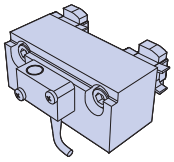

HDCS B V3SWA I

The optional HDCS limit switch assemblies are supplied complete with switch, mounting bracket, fixing bolts and quick fit T-Nuts. Please state part number and quantity required when ordering. Please note that the limit switch assemblies are not interchangeable between the standard or bellows units.

The ordering information below is given to assist communication, but customers are recommended to discuss the application with Hepco first so that the best configuration can be specified to suit the requirements.

Ordering details

HDCS B 64 P1 L1850 P10 BLP

- Part Number — HDCS
- Bellows option 'B' — B
  Leave blank if not required
- Bearing size. Choose 64 or 95 depending on load capacity — 64
- Slide grade — P1
  P1 = Precision, P3 = Commerical
- Beam length 'L' — L1850
- Screw pitch — P10
  P5 = 5mm, P10 = 10mm
- Beam lubrication point — BLP
  Leave blank if not required

HepcoMotion®, Lower Moor Business Park,
Tiverton Way, Tiverton, Devon, England EX16 6TG
Tel: +44 (0) 1884 257000
Fax: +44 (0) 1884 243500
E-mail: sales@hepcomotion.com

INVESTOR IN PEOPLE

Scan this QR code to link directly to the HepcoMotion Home page

ISO 9001 BUREAU VERITAS Certification