SPiiPlusSC

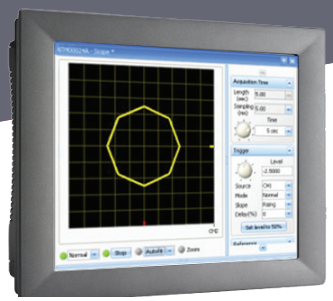

PC Based EtherCAT Multi-Axis Soft Motion & Machine Controller

SPiiPlusSC inside an ACS industrial PC

The Best Control Solution for Motion-Centric Applications

The SPiiPlusSC PC-based machine and motion control software provides demanding machinery with the highest performance possible at the most affordable price, leveraging on the processing power of modern PC technology and on the connectivity of EtherCAT industrial network.

Now, a standard PC with Windows can run your machine application, the Graphical User Interface (GUI) and the SPiiPlusSC real-time motion controller and PLC without adding any hardware. Previously, the control solution to demanding applications, such as SMT assembly systems with high volume data transfer needs, was based on a dedicated motion controller card that plugged into the PC and a dedicated PLC. Not anymore! The SPiiPlusSC control software, which includes its own real-time operating system, runs on one of the processors of a multi-core PC, and communicates with the host applications over shared RAM and virtual TCP/IP. The SPiiPlusSC manages all motor drives and I/O processes using the standard Ethernet ports of the PC as the EtherCAT master communication channel. The result - the highest performance and most flexible controller at the best price. The SPiiPlusSC is also a more cost effective, state of the art replacement for standalone motion controllers and PLCs. It is more powerful and it simplifies the connectivity of the entire system by eliminating the dedicated controller hardware.

A Natural Evolution of ACS' Technology revolutionizes the Motion Control Industry

Since 1990, ACS' motion controllers have utilized a distributed computer platform to answer the needs of demanding machinery. This platform consisted of a dedicated small form factor PC (MPU) and a few Servo Processors on one card. The MPU executed the high level tasks, including communication with the host application, program execution, I/O processing, diagnostics and profile generation. The Servo Processors received the profile information and executed the real-time control algorithms. The MPU communicated with the Servo Processors over a PCI bus. In ACS' new line of distributed controllers, the PCI communication channel between the MPU and the Servo Processors is replaced by EtherCAT. It provides significant benefits in addition to cost savings: physical distribution and scalability. Now the Servo Processor resides within the drive.

All issues related to the integrity and safety of a fully distributed control system – how to respond to a servo processor failure, a MPU failure, or a communication channel failure - have long ago been resolved in the SPiiPlus architecture. In a SPiiPlusSC based system, the dedicated MPU is eliminated and, instead, the software runs on one core of a multi-core host PC. As a member of the SPiiPlus family of controllers, it shares all the powerful features of these controllers regarding programming, motion modes, special I/Os, data recording and support tools. Previous applications that have been developed for a SPiiPlus controller will run on the SPiiPlusSC as is or with minor modifications.

EtherCAT® is registered trademark and patented technology, licensed by Beckhoff Automation GmbH, Germany

Contact us: *sales@acsmotioncontrol.com* | ***www.acsmotioncontrol.com***

ACS MOTION CONTROL

Powerful Motion Controller and PLC

- Up to 64 fully synchronized axes
- Thousands of I/O points
- High-speed Host-Controller communication over shared RAM and virtual TCP/IP
- Programming by ACSPL+ powerful multi-tasking motion language. Full API also provided for Windows based host programming
- Open architecture – supports ACS and other vendors' qualified EtherCAT components

Supported Drives and I/O

All ACS EtherCAT products
Other vendors' qualified drives that comply with DS402 CoE and I/O systems
Maximum number of Axes:
SPiiPlusSC$_{HP}$: 64
SPiiPlusSC$_{LT}$: 8
Maximum number of I/Os: No formal limitation

EtherCAT Network

100 Mb/sec
Update cycle time
SPiiPlusSCHP: 0.2msec
SPiiPlusSCLT: 1msec
Clock jitter: <0.1 microsecond using distributed clock

NetworkBoost™: Cable failure detection and recovery

NetworkBoost™ feature minimizes the downtime of a system when a network cable fails. It enables the network to resume and continue its normal operation without replacing the failed cable (as long as there is no additional cable fail).
It gives an indication of the exact failure location, thus minimizes diagnostics and repair time.

For Performance Demanding Applications

- SMT Assembly systems
- Semiconductor manufacturing and inspection equipment
- FPD manufacturing and inspection
- Solar panel manufacturing
- Packaging machines
- Medical body scanners
- Robotics
- Wide format printing
- High precision, motion centric machinery

SpiiPlusSC Revolutionary Soft Control Archtecture

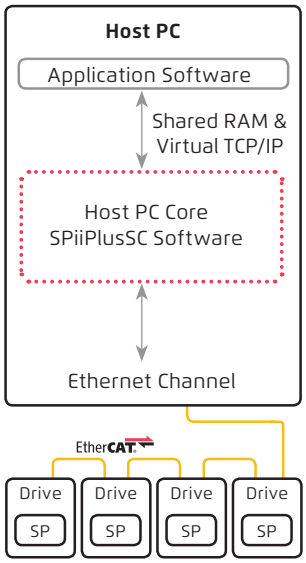

Traditional High End Multi-Axis Motion Control Architecture Control Archtecture

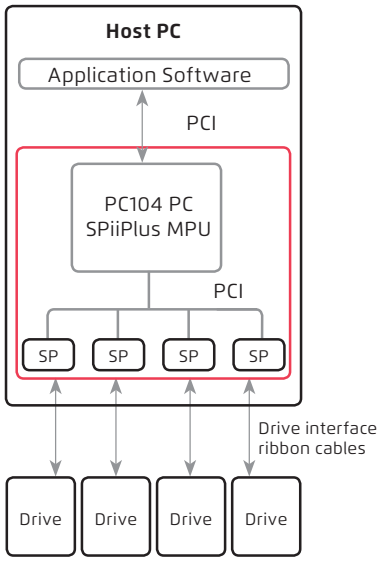

All in one

- GUI
- Machine Application software
- SPiiPlusSC Motion
- Controller & PLC software

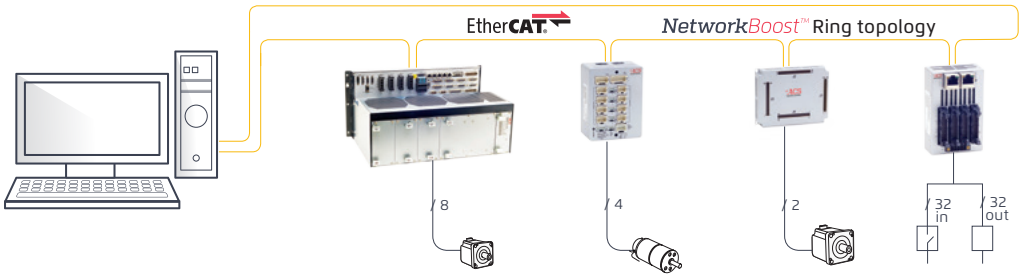

The SPiiPlusSC targets performance demanding as well as cost sensitive multi-axis applications, such as SMT electronic assembly, wire bonders, and packaging machines, where previously a dedicated motion controller was plugged into the PC to support the high speed communication between the system application software and the motion controller.

The SPiiPlusSC software package converts a standard multi-core PC with Windows into a powerful multi-axis motion and machine controller eliminating the need to plug a dedicated control or interface card into the PC. The SPiiPlusSC controls up to 64 fully coordinated axes and thousands of I/Os connected to an EtherCAT network. It supports motor drives and I/O systems that are made by ACS as well as by other vendors that comply with the CAN Over EtherCAT (CoE) protocol. It communicates with the Windows-based application over shared RAM and virtual TCP/IP. The SPiiPlusSC software package includes the SPiiPlus control software and a real-time operating system. Like the entire line of ACS SPiiPlus controllers, it can be programmed by the ACSPL+, a powerful multi-tasking high level motion language. A set of drivers (C and COM DLL) are available for host programming in C/C++/C#/.NET/Visual Basic and LabView. The SPiiPlusSC is complemented by a comprehensive application development tool kit for network configuration, application development, tuning, and maintenance.

The SPiiPlusSC is available in two versions: The SPiiPlusSC$_{HP}$ for complex and performance demanding applications with up to 64 axes, and the SPiiPlusSC$_{LT}$, an economical version that addresses the needs of one to eight axes cost sensitive applications. Both versions provide the same uncompromising servo and motion performance and are more cost effective when compared to any other solution that require a dedicated controller unit. The table below depicts the differences between the two.

HP/LT Versions Comparison	SPiiPlusSC$_{LT}$	SPiiPlusSC$_{HP}$
Maximum Number of Axes	8	64
ACSPL + Buffers (threads)	8	64
Host Application- SPiiPlusSC Interface	TCP/IP	Shared RAM + TCP/IP
EtherCAT Max. Cycle Rate (Cycle Time)	1 kHz (1 ms)	5 kHz (0.2 ms)
Position, Velocity, Current Loops Update Rate (ACS drives)	20 kHz	

Shared RAM Read/Write operations	Microseconds
Read/Write single value	8
Read/Write 1-dimensional array of 200 values	26
Read/Write 2-dimensional array of 10x200 values	226
Callback Round-Trip Time	100+(Cycle-time)/2
Average execution time, statistics over 100,000 samples	

Callback Round-Trip Time covers the following:
- The host application sets a value in the shared memory
- The SPiiPlusSC checks that the value in shared RAM has been updated and then issues an interrupt
- The Interrupt is received by the host application

Host PC Minimum Requirements

	SPiIPlusSC$_{LT}$	SPiiPlusSC$_{HP}$ (Shared Memory is not used)	SPiiPlusSC$_{HP}$ (Shared Memory used/CTIME=0.2)
CPU (Intel only, AMD is not supported)	Atom-based dual-core processor	Dual-Core Processor (except Atom) 2GHz and above	Quad-Core Processor (except Atom) 2GHz and above
RAM	2 GB	2 GB	4 GB
Hard Drive	Min. 8 GB	Min. 8 GB	Min. 8 GB
Network Adapters (Ethernet Ports)	1 (See Notes Below)	1 (See Notes Below)	1 (See Notes Below)

* If *NetworkBoost*™ is used, 2 are required.
** An additional Ethernet network adapter is recommended for Internet/LAN communication.

- *NetworkBoost*™ feature requires two Ethernet network adapters (used for EtherCAT).
- x64 UEFI systems are not supported.

Communication with Host Application

- TCP/IP, UDP
- Shared RAM (SPiiPlusSC-HP only) Size: 100,000 bytes
- Inter-Processor Interrupt (IPI) based Callbacks

Accessories (optional)

SPiiPlusSC-FW-USB: USB Flash Drive containing the SPiiPlusSC firmware (Specify FW version with PO)

Ordering Options

Ordering options	Field	Example	Values
Econo LiTe (LT) or HP version	1	HP	LT, HP
Maximum number of axes	2	08	LT- 2, 4, 8 HP - 2, 4, 8, 16, 32, 64
ECAT 3rd party Servo Drive	3	00	Up to the maximum number of axes (FOC)
ECAT 3rd party Step motor Drive (open & closed loop)	4	00	Up to the maximum number of axes (FOC)
ECAT 3rd party IO EtherCAT node	5	64	32 (FOC), 64 (FOC)
G-Code	6	G	N - None, G - G-code
ServoBoost™, number of axes supported	7	0	N-0, A-4, B-8, C-12,...., P-60, Q-64
Input shaping	8	N	Y - Yes, N - No
Maximum MPU cycle rate (kHz)	9	2	For LT - 1; For HP - 2, 4, 5 (See Note below)
NetworkBoost™ - Ring topology, Flexible configuration	10	A	N - None, A - NetworkBoost™, B - Flexible configuration, C - Both

Note: Maximum MPU cycle rate (kHz). Optionally, the HP version also supports MPU cycles of 4kHz, 5kHz. For MPU cycle rate greater than 2kHz the 5kHz option should be selected.
With 4kHz, the maximum number of axes is 16. With 5kHz, the maximum number of axes is 8.
When selecting the default value, there is no impact on the PN. When selecting 5kHz, PN is affected.

Example: SP+SC-HP08000064G0N2A

Field		1	2	3	4	5	6	7	8	9	10
PN	**SP+SC**	HP	08	00	00	64	G	0	N	2	A

ACS' Wide Range of EtherCAT® Motor Drives and I/O Systems

ACS offers a wide range of universal motor drives and I/O systems. The SPiiPlusSC package includes the firmware of all such devices. Upon power-up it downloads the firmware to each device and activates it.

Copyright © ACS Motion Control. All rights reserved. Ver. 3.7, 8-2017

For the latest updates visit our website at **www.acsmotioncontrol.com**

ACS MOTION CONTROL